Global EDI Implementation Guideline

DESADV D07A

Based on Despatch advice message

UN/EDIFACT D07A

1	June17	IT	51; 62	Decimals figure in segment QTY
0	April 16	IT		
Rev.	Date	Department	Page(s)	Modification notes

Producer / Department	Approver Management System	Approver Board of Directors	Date	Status*
27.06.2017	27.06.2017			completed

* This document is valid without physical signatures, the approvals have been sent electronically. The evidences can be requested from Corporate Quality.

Global EDI Implementation Guideline DESADV D07

1. INTRODUCTION

This message guide provides the definition of a Despatch advice message (DESADV), based on the EDIFACT DESADV D07A, to be used in Electronic Data Interchange (EDI) between Vibracoustic and its Trading Partners.

Global EDI Implementation Guideline DESADV D07

TABLE OF CONTENTS

Global EDI Implementation Guideline DESADV D07

2. PURPOSE

The DESADV message has the function of sending dispatch and transport data before the goods reach the destination plant.

3. SCOPE

This EDI standard applies to all suppliers of Vibracoustic facilities worldwide using Global EDI standard. The explicit list of relevant Vibracoustic plants will be provided and regularly updated.

4. TERMS / DEFINITIONS / ABBREVIATIONS

DESADV : Despatch Advice

EDI : Electronic Data Interchange

GTL : Global Transport Label

Global EDI Implementation Guideline DESADV D07

5. PROCESS / METHOD / PROCEDURE

5.1. Schematic Message

UNA					Service string advice	
UNB					Interchange header	
						Rep. = n
	UNH				ID message "DESADV D07A"	Per Delivery note
	BGM				Beginning of message	
		DTM			Despatch advice date	
		DTM			Despatch date	
		DTM			Estimated arrival date and time	
		RFF			Transport document reference	
		RFF			Invoice reference	
			DTM		Reference date (invoice)	
		RFF			Fiscal note reference	
			DTM		Reference date (fiscal note)	
		NAD			Buyer's name and address	
		NAD			Issuer's name and address	
		NAD			Seller's name and address	
			RFF		Seller's DUNS number	
		NAD			Ship From's name and address	
			RFF		Ship From's DUNS number	
		NAD			Ship to's name and address	
		CPS			Consignment packing sequence	
			PAC		Package	
				QTY	Maximum stackability	
				QTY	Number of contained packages/items	
				PCI	Handling unit label type 6J	
					GIN Individual HU's transport label number	
					GIN Individual packaging item's label numbers	
			PAC		Packaging aid	
		CPS			Consignment packing sequence	
			PAC		Package	
				QTY	Maximum stackability	
				QTY	Actual quantity per package	
				PCI	Package identification 1J	
					GIR Batch ID	
					DTM Production date	
					DTM Last use date	
					GIN Label serial number(s)	
			PAC		Packaging aid	
			LIN		Line item	
				PIA	Additional product id	
				IMD	Item description	
				QTY	Despatched quantity	
				RFF	Delivery note reference, Line number	
					DTM Delivery note date	
				RFF	Order reference, Line number	
				DGS	Dangerous goods	
					FTX Dangerous goods description	
					FTX Dangerous goods declaration exception	
				LOC	Place of discharge	
	UNT				Message trailer	
UNZ					Interchange trailer	

5.2. Message Type

Counter	No	Tag	St	MaxOcc	Level	Content
0000	1	**UNA**	R	1	0	Service string advice
0000	2	**UNB**	M	1	0	Interchange header
0010	3	**UNH**	M	1	0	Message header
0020	4	**BGM**	M	1	0	Beginning of message
0030	5	**DTM**	R	1	1	Despatch advice date
0030	6	**DTM**	O	1	1	Despatch date
0030	7	**DTM**	O	1	1	Estimated arrival date and time
0080		**SG1**	O	1	1	Transport document reference
0090	8	**RFF**	M	1	1	Transport document reference
0080		**SG1**	O	1	1	Invoice
0090	9	**RFF**	M	1	1	Invoice reference
0100	10	**DTM**	O	1	2	Reference date (invoice)
0080		**SG1**	O	1	1	Fiscal note
0090	11	**RFF**	M	1	1	Fiscal note reference
0100	12	**DTM**	O	1	2	Reference date (fiscal note)
0110		**SG2**	O	1	1	Buyer
0120	13	**NAD**	M	1	1	Buyer's name and address
0110		**SG2**	R	1	1	Issuer/Plant
0120	14	**NAD**	M	1	1	Issuer's name and address
0110		**SG2**	R	1	1	Seller/Supplier
0120	15	**NAD**	M	1	1	Seller's name and address
0140		**SG3**	R	1	2	Additional Party ID (DUNS)
0150	16	**RFF**	M	1	2	Seller's DUNS number.
0110		**SG2**	R	1	1	Ship From
0120	17	**NAD**	M	1	1	Ship From's name and address
0140		**SG3**	D	1	2	Additional Party ID (DUNS)
0150	18	**RFF**	M	1	2	Ship From's DUNS no.
0110		**SG2**	R	1	1	Ship to
0120	19	**NAD**	M	1	1	Ship-to's name and address
0390		**SG10**	O	9999	1	Despatch control line / List of handling unit groups
0400	20	**CPS**	M	1	1	Consignment packing sequence

Counter = Counter of segment/group in the EDIFACT directory
No = Consecutive segment number
Tag = Segment-/Group-Tag
MaxOcc = Maximum occurrence of the segment/group

St = Status
EDIFACT: M=Mandatory, C=Conditional
Application: R=Required, O=Optional, D=Dependent
A=Advised, N=Not used

Global EDI Implementation Guideline DESADV D07

Counter	No	Tag	St	MaxOcc	Level	Content
0430		**SG11**	R	9999	2	Handling unit group details
0440	21	**PAC**	M	1	2	Package
0460	22	**QTY**	O	1	3	Maximum stackability
0460	23	**QTY**	R	1	3	Number of contained packages/items
0500		**SG13**	R	1000	3	List of individual handling units
0510	24	**PCI**	M	1	3	Handling unit label type
0570		**SG15**	R	1	4	Individual handling unit's transport label number
0580	25	**GIN**	M	1	4	Individual handling unit's transport label number
0570		**SG15**	R	98	4	Individual handling unit's label numbers
0580	26	**GIN**	M	1	4	Individual packaging item's label numbers
0430		**SG11**	O	9999	2	Packaging aid
0440	27	**PAC**	M	1	2	Package
0390		**SG10**	R	9999	1	Despatch control line / group of inner packaging items and article line
0400	28	**CPS**	M	1	1	Consignment packing sequence
0430		**SG11**	R	9999	2	Group of inner packaging items
0440	29	**PAC**	M	1	2	Package
0460	30	**QTY**	O	1	3	Maximum stackability
0460	31	**QTY**	R	1	3	Actual quantity per package
0500		**SG13**	R	1000	3	List of individual package items
0510	32	**PCI**	M	1	3	Package identification
0540		**SG14**	O	1	4	Production batch
0550	33	**GIR**	M	1	4	Batch ID
0560	34	**DTM**	O	1	5	Production date
0560	35	**DTM**	R	1	5	Last use date
0570		**SG15**	R	99	4	Label number(s)
0580	36	**GIN**	M	1	4	Label serial number(s)
0430		**SG11**	O	9999	2	Packaging aid
0440	37	**PAC**	M	1	2	Package
0650		**SG17**	R	9999	2	Article and Despatched Article
0660	38	**LIN**	M	1	2	Line item
0670	39	**PIA**	O	1	3	Additional product id
0680	40	**IMD**	R	1	3	Item description

Counter = Counter of segment/group in the EDIFACT directory
No = Consecutive segment number
Tag = Segment-/Group-Tag
MaxOcc = Maximum occurrence of the segment/group

St = Status
EDIFACT: M=Mandatory, C=Conditional
Application: R=Required, O=Optional, D=Dependent
A=Advised, N=Not used

Global EDI Implementation Guideline DESADV D07

Counter	No	Tag	St	MaxOcc	Level	Content
0700	41	**QTY**	R	1	3	Despatched quantity
0830		**SG18**	R	1	3	Shipment / Delivery note reference
0840	42	**RFF**	M	1	3	Delivery note reference, Line number
0870	43	**DTM**	R	1	4	Delivery note date
0830		**SG18**	R	1	3	Order reference
0840	44	**RFF**	M	1	3	Order reference, Line number
0880		**SG19**	O	1	3	Dangerous goods information
0890	45	**DGS**	M	1	3	Dangerous goods
0910	46	**FTX**	O	1	4	Dangerous goods description
0910	47	**FTX**	O	1	4	Dangerous goods declaration exception
0920		**SG20**	O	1	3	Place of discharge
0930	48	**LOC**	M	1	3	Place of discharge
1160	49	**UNT**	M	1	0	Message trailer
0000	50	**UNZ**	M	1	0	Interchange trailer

Counter = Counter of segment/group in the EDIFACT directory
No = Consecutive segment number
Tag = Segment-/Group-Tag
MaxOcc = Maximum occurrence of the segment/group

St = Status
EDIFACT: M=Mandatory, C=Conditional
Application: R=Required, O=Optional, D=Dependent
A=Advised, N=Not used

Global EDI Implementation Guideline DESADV D07A

5.3. Branching Diagram

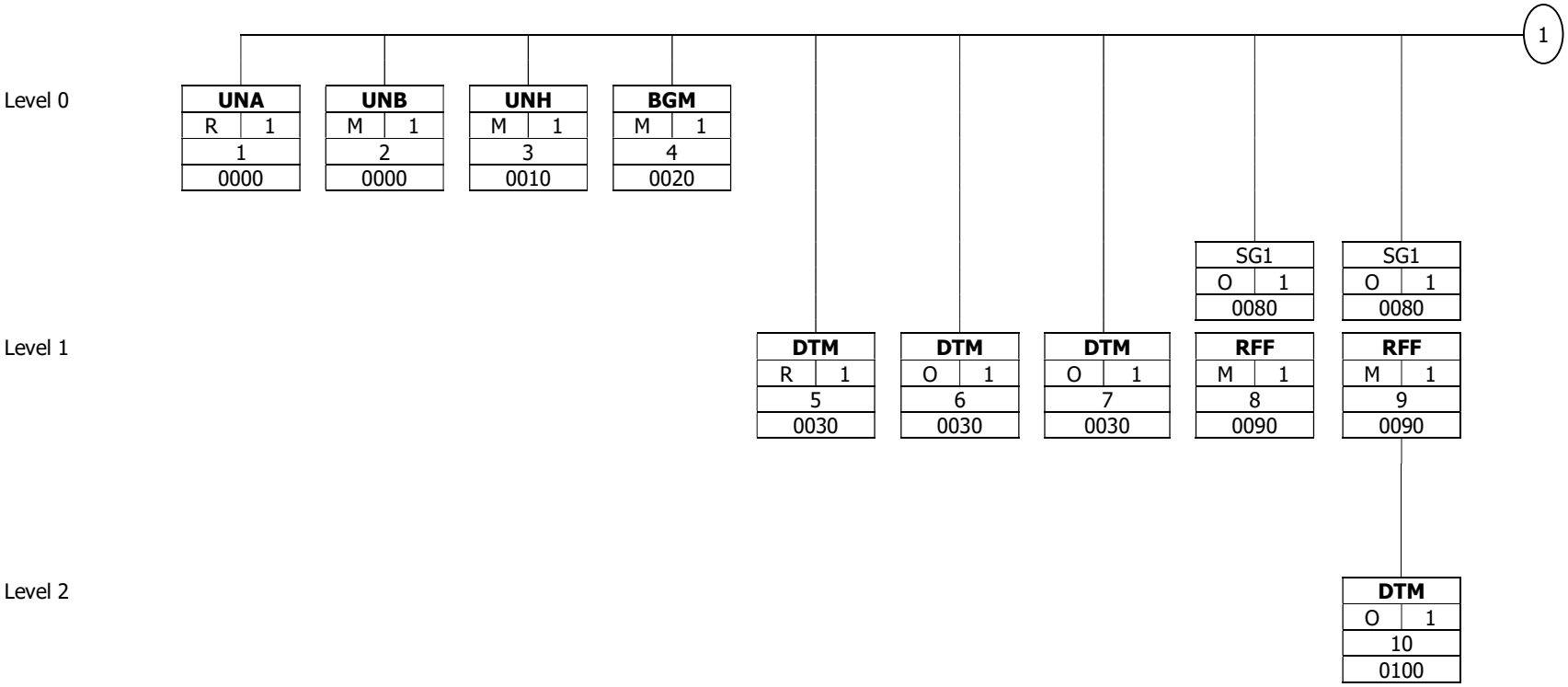

Tag	
St	MaxOcc
No	
Counter	

Tag = Segment-/Group-Tag
St = Status, MaxOcc = Maximum occurrence of the segment/group
No = Consecutive segment number
Counter = Counter of segment/group in the EDIFACT directory

St = Status
EDIFACT: M=Mandatory, C=Conditional

Application: R=Required, O=Optional, D=Dependent
A=Advised, N=Not used

Global EDI Implementation Guideline DESADV D07A

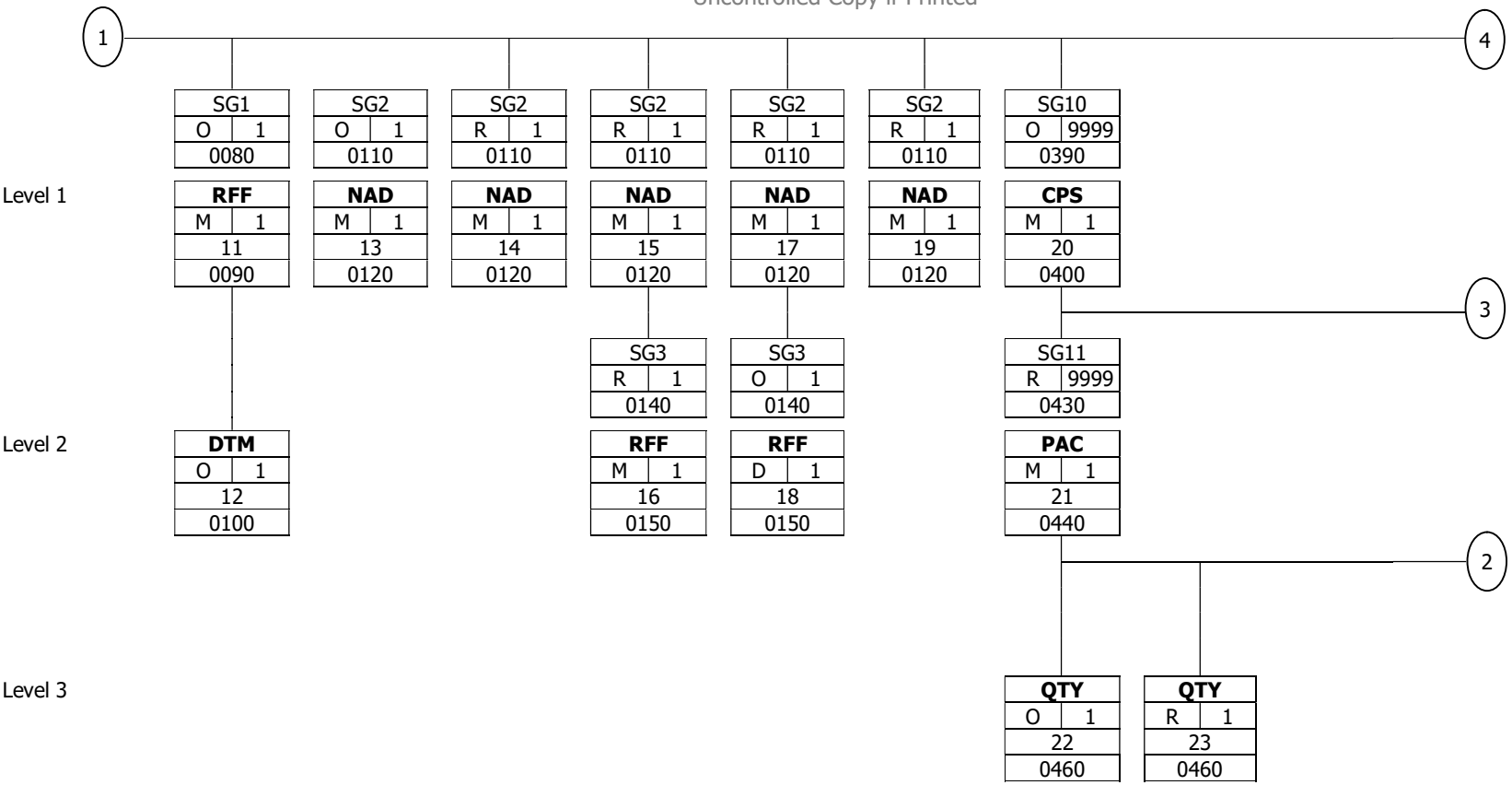

Tag	
St	MaxOcc
No	
Counter	

Tag = Segment-/Group-Tag
St = Status, MaxOcc = Maximum occurrence of the segment/group
No = Consecutive segment number
Counter = Counter of segment/group in the EDIFACT directory

St = Status
EDIFACT: M=Mandatory, C=Conditional

Application: R=Required, O=Optional, D=Dependent
A=Advised, N=Not used

Global EDI Implementation Guideline DESADV D07A

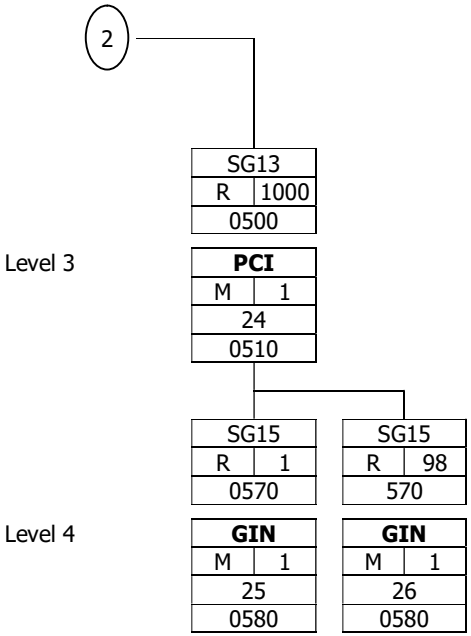

Tag	
St	MaxOcc
No	
Counter	

Tag = Segment-/Group-Tag
St = Status, MaxOcc = Maximum occurrence of the segment/group
No = Consecutive segment number
Counter = Counter of segment/group in the EDIFACT directory

St = Status
EDIFACT: M=Mandatory, C=Conditional

Application: R=Required, O=Optional, D=Dependent
A=Advised, N=Not used

Global EDI Implementation Guideline DESADV D07A

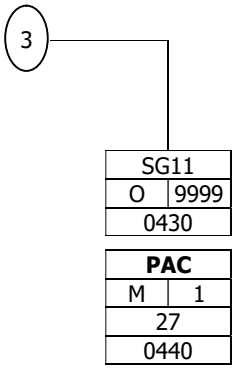

Tag	
St	MaxOcc
No	
Counter	

Tag = Segment-/Group-Tag
St = Status, MaxOcc = Maximum occurrence of the segment/group
No = Consecutive segment number
Counter = Counter of segment/group in the EDIFACT directory

St = Status
EDIFACT: M=Mandatory, C=Conditional

Application: R=Required, O=Optional, D=Dependent
A=Advised, N=Not used

Global EDI Implementation Guideline DESADV D07A

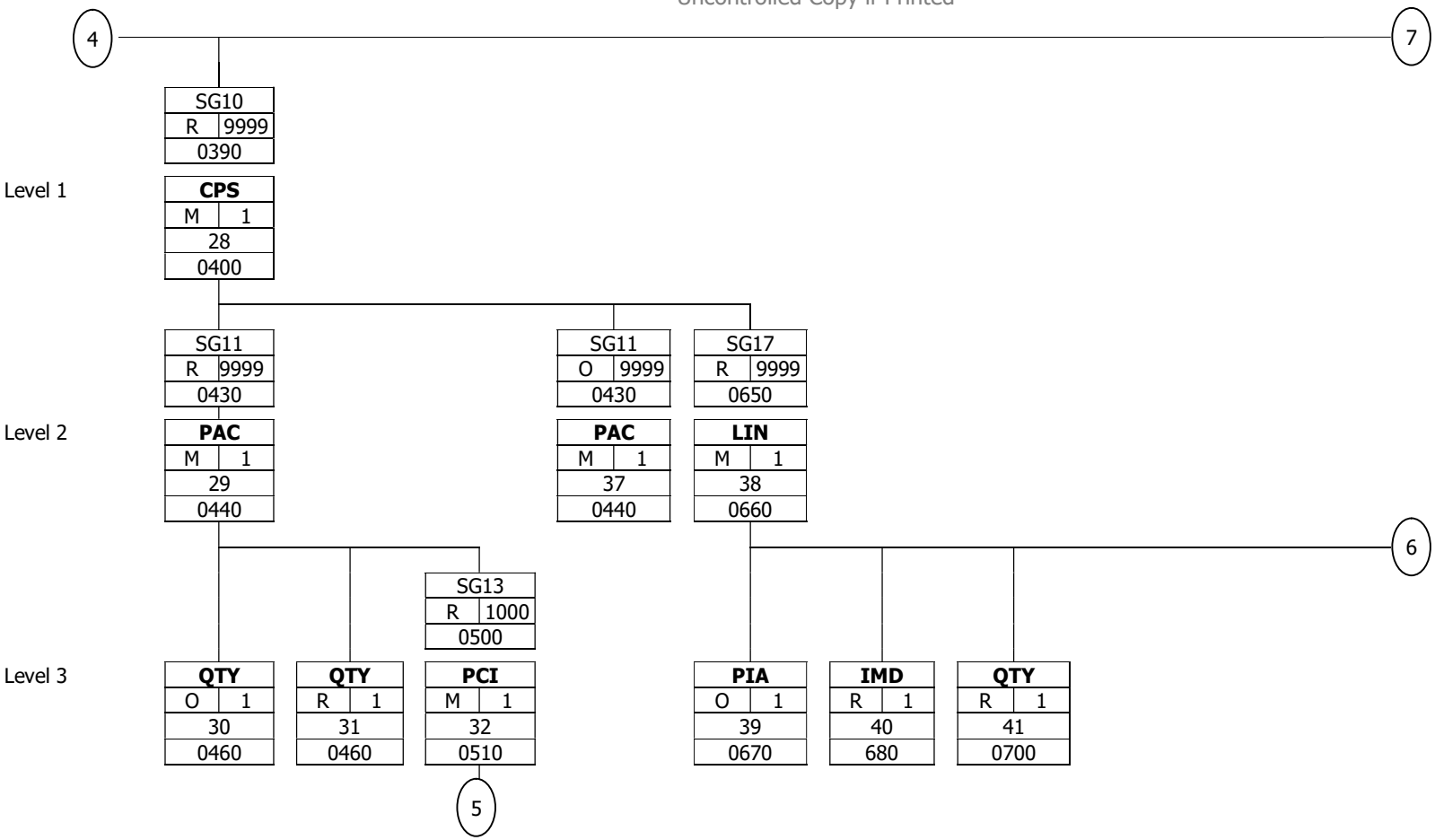

Tag	
St	MaxOcc
No	
Counter	

Tag = Segment-/Group-Tag
St = Status, MaxOcc = Maximum occurrence of the segment/group
No = Consecutive segment number
Counter = Counter of segment/group in the EDIFACT directory

St = Status
EDIFACT: M=Mandatory, C=Conditional

Application: R=Required, O=Optional, D=Dependent
A=Advised, N=Not used

Global EDI Implementation Guideline DESADV D07A

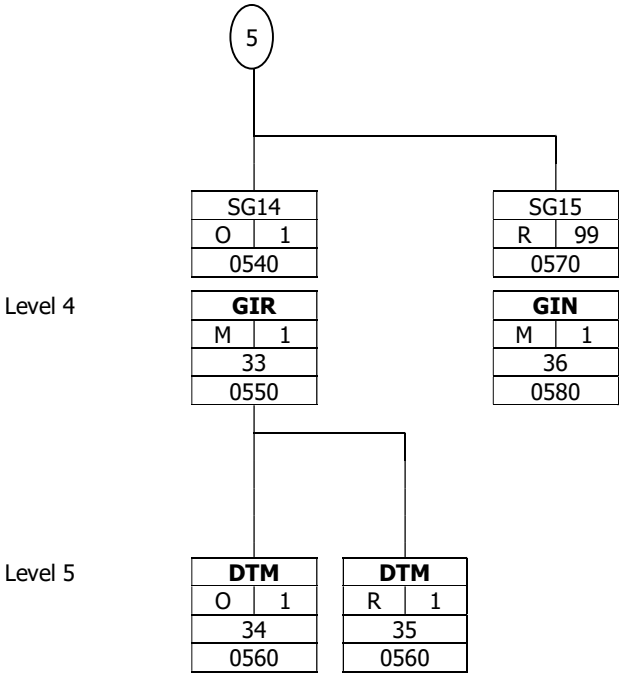

Tag	
St	MaxOcc
No	
Counter	

Tag = Segment-/Group-Tag
St = Status, MaxOcc = Maximum occurrence of the segment/group
No = Consecutive segment number
Counter = Counter of segment/group in the EDIFACT directory

St = Status
EDIFACT: M=Mandatory, C=Conditional

Application: R=Required, O=Optional, D=Dependent
A=Advised, N=Not used

Global EDI Implementation Guideline DESADV D07A

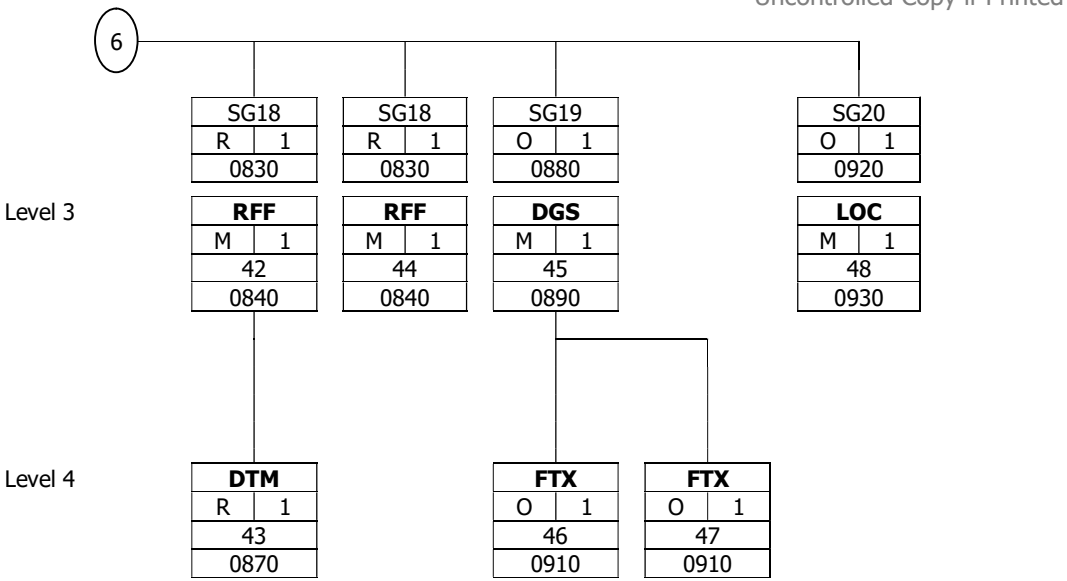

Tag	
St	MaxOcc
No	
Counter	

Tag = Segment-/Group-Tag
St = Status, MaxOcc = Maximum occurrence of the segment/group
No = Consecutive segment number
Counter = Counter of segment/group in the EDIFACT directory

St = Status
EDIFACT: M=Mandatory, C=Conditional

Application: R=Required, O=Optional, D=Dependent
A=Advised, N=Not used

Global EDI Implementation Guideline DESADV D07A

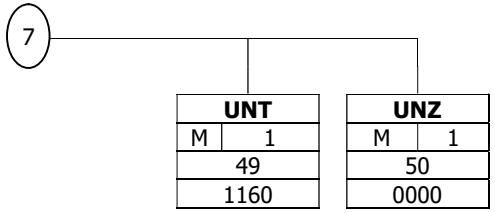

Tag	
St	MaxOcc
No	
Counter	

Tag = Segment-/Group-Tag
St = Status, MaxOcc = Maximum occurrence of the segment/group
No = Consecutive segment number
Counter = Counter of segment/group in the EDIFACT directory

St = Status
EDIFACT: M=Mandatory, C=Conditional

Application: R=Required, O=Optional, D=Dependent
A=Advised, N=Not used

Global EDI Implementation Guideline DESADV D07

5.4. Segment Details

UNA Service string advice

Counter	No	Tag	St	Max Occ.	Level	Content
0000	1	**UNA**	R	1	0	Service string advice

		Standard		Implementation		
Tag	Name	St	Format	St	Format	Use/Remarks
UNA						
UNA1	COMPONENT DATA ELEMENT SEPARATOR	M	an1	M	an1	':' colon
UNA2	DATA ELEMENT SEPARATOR	M	an1	M	an1	'+' plus sign
UNA3	DECIMAL NOTATION	M	an1	M	an1	'.'
UNA4	RELEASE INDICATOR	M	an1	M	an1	'?' question mark
UNA5	Reserved for future use	M	an1	M	an1	' ' 'blank', 'simple white space', 'space character' or whatever you name it.
UNA6	SEGMENT TERMINATOR	M	an1	M	an1	"' apostrophe

Remark:

Example:
UNA:+.? '

Global EDI Implementation Guideline DESADV D07

UNB Interchange header

Counter	No	Tag	St	Max Occ.	Level	Content
0000	2	**UNB**	M	1	0	Interchange header

		Standard		Implementation		
Tag	Name	St	Format	St	Format	Remarks
UNB						
S001	SYNTAX IDENTIFIER	M		M		
0001	Syntax identifier	M	a4	M	a4	**UNOA = UN/ECE level A** **UNOB = UN/ECE level B** **UNOC = UN/ECE level C** (UNOC = character set and coding according ISO 8859-1 Latin alphabet No. 1. In IBM's EBCDIC world this set is known as code page 819 (also as several language code pages like 273, 277,...). Delimiters and coding scheme as described in UNA segment.)
0002	Syntax version number	M	n1	M	n1	**2 = Version 2** **3 = Version 3** ('3' as the only valid value to qualify all used service segment to be built on syntax level 3 (ISO 9735 : 1992))
S002	INTERCHANGE SENDER	M		M		
0004	Sender identification	M	an..35	M	an..35	Unique ID of the sender in the data transmission network or system
0007	Partner identification code qualifier	C	an..4	N		
0008	Address for reverse routing	C	an..14	N		
S003	INTERCHANGE RECIPIENT	M		M		
0010	Recipient identification	M	an..35	M	an..35	Unique ID of the receiver in the data transmission network or system
0007	Partner identification code qualifier	C	an..4	N		
0014	Routing address	C	an..14	N		
S004	DATE/TIME OF PREPARATION	M		M		
0017	Date of preparation	M	n6	M	n6	Format YYMMDD
0019	Time of preparation	M	n4	M	n4	Format HHMM
0020	INTERCHANGE CONTROL REFERENCE	M	an..14	M	an..14	Unique ID of an interchange.
S005	RECIPIENT'S REFERENCE, PASSWORD	C		N		
0022	Recipient's reference/password	M	an..14	N		
0025	Recipient's reference/password qualifier	C	an2	N		
0026	APPLICATION REFERENCE	C	an..14	N		
0029	PROCESSING PRIORITY CODE	C	a1	N		
0031	ACKNOWLEDGEMENT REQUEST	C	n1	N		
0032	COMMUNICATIONS AGREEMENT ID	C	an..35	N		
0035	TEST INDICATOR	C	n1	O	n1	Only to be used if the interchange is for test purposes. Omit this data element for valid interchanges. **1 = Interchange is a test**

Remark:

Example:
UNB+UNOC:3+SENDER+RECEIVER+141117:1803+MC08N6'

Counter = Counter of segment/group in the EDIFACT directory
No = Consecutive segment number
Tag = Segment-/Group-Tag
MaxOcc = Maximum occurrence of the segment/group

St = Status
EDIFACT: M=Mandatory, C=Conditional
Application: R=Required, O=Optional, D=Dependent
A=Advised, N=Not used

Global EDI Implementation Guideline DESADV D07

UNH Message header

Counter	No	Tag	St	Max Occ.	Level	Content
0010	3	**UNH**	M	1	0	Message header

		Standard		Implementation		
Tag	Name	St	Format	St	Format	Remarks
UNH						
0062	MESSAGE REFERENCE NUMBER	M	an..14	M	an..14	Message reference number (in the interchange) (This sender-generated reference must be unique within an interchange. UNT:0062 must have the same value. Often this is a serial number starting with 1 within the interchange. For example, this reference is reflected by the authentication message that relates to the message / interchange.)
S009	MESSAGE IDENTIFIER	M		M		
0065	Message type	M	an..6	M	an..6	**DESADV = Despatch advice message**
0052	Message version number	M	an..3	M	an..3	**D = Draft version/UN/EDIFACT Directory**
0054	Message release number	M	an..3	M	an..3	**07A = Release 2007 - A**
0051	Controlling agency	M	an..3	M	an..2	**UN = UN/CEFACT**
0057	Association assigned code	C	an..6	N		
0110	Code List directory version number	C	an..6	N		
0113	Message type sub-function identification	C	an..6	N		
0068	COMMON ACCESS REFERENCE	C	an..35	N		
S010	STATUS OF THE TRANSFER	C		N		
0070	Sequence of transfers	M	n..2	N		
0073	First and last transfer	C	a1	N		
S016	MESSAGE SUBSET IDENTIFICATION	C		N		
0115	Message subset identification	M	an..14	N		
0116	Message subset version number	C	an..3	N		
0118	Message subset release number	C	an..3	N		
0051	Controlling agency, coded	C	an..3	N		
S017	MESSAGE IMPLEMENTATION GUIDELINE IDENTIFICATION	C		N		
0121	Message implementation guideline identification	M	an..14	N		
0122	Message implementation guideline version number	C	an..3	N		
0124	Message implementation guideline release number	C	an..3	N		
0051	Controlling agency, coded	C	an..3	N		
S018	SCENARIO IDENTIFICATION	C		N		
0127	Scenario identification	M	an..14	N		
0128	Scenario version number	C	an..3	N		
0130	Scenario release number	C	an..3	N		
0051	Controlling agency, coded	C	an..3	N		

Remark:

Example:
UNH+1+DESADV:D:07A:UN'

Counter = Counter of segment/group in the EDIFACT directory
No = Consecutive segment number
Tag = Segment-/Group-Tag
MaxOcc = Maximum occurrence of the segment/group

St = Status
EDIFACT: M=Mandatory, C=Conditional
Application: R=Required, O=Optional, D=Dependent
A=Advised, N=Not used

Global EDI Implementation Guideline DESADV D07

BGM Beginning of message

Counter	No	Tag	St	Max Occ.	Level	Content
0020	4	**BGM**	M	1	0	Beginning of message

		Standard		Implementation		
Tag	Name	St	Format	St	Format	Remark
BGM						
C002	DOCUMENT/MESSAGE NAME	C		R		
1001	Document name code	C	an..3	R	an..3	Code specifying the document name. **351 = Despatch advice** Document/message by means of which the seller or consignor informs the consignee about the despatch of goods.
1131	Code list identification code	C	an..17	N		
3055	Code list responsible agency code	C	an..3	N		
1000	Document name	C	an..35	N		
C106	DOCUMENT/MESSAGE IDENTIFICATION	C		R		
1004	Document identifier	C	an..35	R	an..16	To identify a document Unique number for the Despatch Advice assigned by consignor/shipper. The number must correspond with the Supplier Delivery Note Number.The number must not be repeated within **five year**.This data element shall also be given on the Transport label.
1056	Version identifier	C	an..9	N		
1060	Revision identifier	C	an..6	N		
1225	MESSAGE FUNCTION CODE	C	an..3	R	an..3	Code indicating the function of the document. **9 = Original** Initial transmission related to a given transaction.
4343	RESPONSE TYPE CODE	C	an..3	N		

Remark:

The document identifier (DE 1004) informs about the supplier delivery note number. For each different Delivery note number generate a new segment BGM.

Example:

BGM+351+DN12345+9'

Counter = Counter of segment/group in the EDIFACT directory
No = Consecutive segment number
Tag = Segment-/Group-Tag
MaxOcc = Maximum occurrence of the segment/group

St = Status
EDIFACT: M=Mandatory, C=Conditional
Application: R=Required, O=Optional, D=Dependent
A=Advised, N=Not used

Global EDI Implementation Guideline DESADV D07

DTM Despatch advice date

Counter	No	Tag	St	Max Occ.	Level	Content
0030	5	**DTM**	R	1	1	Despatch advice date

		Standard		Implementation		
Tag	Name	St	Format	St	Format	Remark
DTM						
C507	DATE/TIME/PERIOD	M		M		
2005	Date or time or period function code qualifier	M	an..3	M	an..3	Code qualifying the function of a date, time or period. **137 = Document issue date time** Date that a document was issued and when appropriate, signed or otherwise authenticated.
2380	Date or time or period text	C	an..35	R	n..12	Creation date and time of message in sender's system.
2379	Date or time or period format code	C	an..3	R	an..3	Code specifying the representation of a date, time or period. **203 = CCYYMMDDHHMM** Calendar date including time with minutes: C=Century; Y=Year; M=Month; D=Day; H=Hour; M=Minutes.

Remark:

Example:
DTM+137:201411171009:203'

Counter = Counter of segment/group in the EDIFACT directory
No = Consecutive segment number
Tag = Segment-/Group-Tag
MaxOcc = Maximum occurrence of the segment/group

St = Status
EDIFACT: M=Mandatory, C=Conditional
Application: R=Required, O=Optional, D=Dependent
A=Advised, N=Not used

Global EDI Implementation Guideline DESADV D07

DTM Despatch date

Counter	No	Tag	St	Max Occ.	Level	Content
0030	6	**DTM**	O	1	1	Despatch date

		Standard		Implementation		
Tag	Name	St	Format	St	Format	Remark
DTM						
C507	DATE/TIME/PERIOD	M		M		
2005	Date or time or period function code qualifier	M	an..3	M	an..3	Code qualifying the function of a date, time or period. **11 = Despatch date and or time** Date/time on which the goods are or are expected to be despatched or shipped.
2380	Date or time or period text	C	an..35	R	n..12	Date/time of despatch of goods.
2379	Date or time or period format code	C	an..3	R	an..3	Code specifying the representation of a date, time or period. **102 = CCYYMMDD** Calendar date: C = Century ; Y = Year ; M = Month ; D = Day. **203 = CCYYMMDDHHMM** Calendar date including time with minutes: C=Century; Y=Year; M=Month; D=Day; H=Hour; M=Minutes.

Remark:
Used in processes where the supplier is responsible for the transport arrangements and organisation.

Example:
DTM+11:20141117:102'

Counter = Counter of segment/group in the EDIFACT directory
No = Consecutive segment number
Tag = Segment-/Group-Tag
MaxOcc = Maximum occurrence of the segment/group

St = Status
EDIFACT: M=Mandatory, C=Conditional
Application: R=Required, O=Optional, D=Dependent
A=Advised, N=Not used

Global EDI Implementation Guideline DESADV D07

DTM Estimated arrival date and time

Counter	No	Tag	St	Max Occ.	Level	Content
0030	7	**DTM**	O	1	1	Estimated arrival date and time

		Standard		Implementation		
Tag	Name	St	Format	St	Format	Remark
DTM						
C507	DATE/TIME/PERIOD	M		M		
2005	Date or time or period function code qualifier	M	an..3	M	an..3	Code qualifying the function of a date, time or period. **132 = Transport means arrival date time, estimated** Date and or time of the estimated arrival of means of transport
2380	Date or time or period text	C	an..35	R	n..12	Goods arrival date/time, estimated by sender.
2379	Date or time or period format code	C	an..3	R	an..3	Code specifying the representation of a date, time or period. **102 CCYYMMDD** Calendar date: C = Century ; Y = Year ; M = Month ; D = Day. **203 = CCYYMMDDHHMM** Calendar date including time with minutes: C=Century; Y=Year; M=Month; D=Day; H=Hour; M=Minutes.

Remark:
Expected date of arrival of the shipment at ship-to's premises, estimated by the sender.

Example:
DTM+132:201411180845:203'

Counter = Counter of segment/group in the EDIFACT directory
No = Consecutive segment number
Tag = Segment-/Group-Tag
MaxOcc = Maximum occurrence of the segment/group

St = Status
EDIFACT: M=Mandatory, C=Conditional
Application: R=Required, O=Optional, D=Dependent
A=Advised, N=Not used

Global EDI Implementation Guideline DESADV D07

RFF Transport document reference

Counter	No	Tag	St	Max Occ.	Level	Content
0080		**SG1**	O	1	1	Transport document reference
0090	8	**RFF**	M	1	1	Transport document reference

		Standard		Implementation		
Tag	Name	St	Format	St	Format	Remark
RFF						
C506	REFERENCE	M		M		
1153	Reference code qualifier	M	an..3	M	an..3	Code qualifying a reference. **AAS = Transport contract document identifier** Reference number to identify a document evidencing a transport contract.
1154	Reference identifier	C	an..70	R	an..35	Unique identifier of a transport document.
1156	Document line identifier	C	an..6	N		
1056	Version identifier	C	an..9	N		
1060	Revision identifier	C	an..6	N		

Remark:

A reference to a document created by the carrier like freight waybill or express carrier tracking or last bill of lading in case of vendors using Vibracoustic global supplier portal.

Example:

RFF+AAS:263510'

Global EDI Implementation Guideline DESADV D07

RFF Invoice reference

Counter	No	Tag	St	Max Occ.	Level	Content
0080		**SG1**	O	1	1	Invoice
0090	9	**RFF**	M	1	1	Invoice reference

		Standard		Implementation		
Tag	Name	St	Format	St	Format	Remark
RFF						
C506	REFERENCE	M		M		
1153	Reference code qualifier	M	an..3	M	an..3	Code qualifying a reference. **IV = Invoice document identifier** Reference number to identify an invoice.
1154	Reference identifier	C	an..70	R	an..35	Unique identifier of an invoice.
1156	Document line identifier	C	an..6	N		
1056	Version identifier	C	an..9	N		
1060	Revision identifier	C	an..6	N		

Remark:

Example:
RFF+IV:INV2014125'

Counter = Counter of segment/group in the EDIFACT directory
No = Consecutive segment number
Tag = Segment-/Group-Tag
MaxOcc = Maximum occurrence of the segment/group

St = Status
EDIFACT: M=Mandatory, C=Conditional
Application: R=Required, O=Optional, D=Dependent
A=Advised, N=Not used

Global EDI Implementation Guideline DESADV D07

DTM Reference date (invoice)

Counter	No	Tag	St	Max Occ.	Level	Content
0080		**SG1**	O	1	1	Invoice
0100	10	**DTM**	O	1	2	Reference date (invoice)

		Standard		Implementation		
Tag	Name	St	Format	St	Format	Remark
DTM						
C507	DATE/TIME/PERIOD	M	1	M	1	
2005	Date or time or period function code qualifier	M	an..3	M	an..3	Code qualifying the function of a date, time or period. **171 = Reference date/time** Date/time on which the reference was issued.
2380	Date or time or period text	C	an..35	R	n..8	Date of invoice.
2379	Date or time or period format code	C	an..3	R	an..3	Code specifying the representation of a date, time or period. **102 = CCYYMMDD** Calendar date: C = Century ; Y = Year ; M = Month ; D = Day.

Remark:

Example:
DTM+171:20141117:102'

Counter = Counter of segment/group in the EDIFACT directory
No = Consecutive segment number
Tag = Segment-/Group-Tag
MaxOcc = Maximum occurrence of the segment/group

St = Status
EDIFACT: M=Mandatory, C=Conditional
Application: R=Required, O=Optional, D=Dependent
A=Advised, N=Not used

Global EDI Implementation Guideline DESADV D07

RFF Fiscal note reference

Counter	No	Tag	St	Max Occ.	Level	Content
0080		**SG1**	O	1	1	Fiscal note
0090	11	**RFF**	M	1	1	Fiscal note reference

		Standard		Implementation		
Tag	Name	St	Format	St	Format	Remark
RFF						
C506	REFERENCE	M		M		
1153	Reference code qualifier	M	an..3	M	an..3	Code qualifying a reference. **ARG = Registro Informacion Fiscal (RIF) number** A number assigned by the government to a business in some Latin American countries.
1154	Reference identifier	C	an..70	R	an..70	Unique identifier of a Fiscal Note.
1156	Document line identifier	C	an..6	N		
1056	Version identifier	C	an..9	N		
1060	Revision identifier	C	an..6	N		

Remark:
This represents the 'Notafiscal' necessary in several South American countries.

Example:
RFF+ARG:12345'

Global EDI Implementation Guideline DESADV D07

DTM Reference date (fiscal note)

Counter	No	Tag	St	Max Occ.	Level	Content
0080		**SG1**	O	1	1	Fiscal note
0100	12	**DTM**	O	1	2	Reference date (fiscal note)

		Standard		Implementation		
Tag	Name	St	Format	St	Format	Remark
DTM						
C507	DATE/TIME/PERIOD	M		M		
2005	Date or time or period function code qualifier	M	an..3	M	an..3	Code qualifying the function of a date, time or period. **171 = Reference date/time** Date/time on which the reference was issued.
2380	Date or time or period text	C	an..35	M	n..12	Date, on which the document was issued.
2379	Date or time or period format code	C	an..3	R	an..3	Code specifying the representation of a date, time or period. **102 CCYYMMDD** Calendar date: C = Century ; Y = Year ; M = Month ; D = Day. **203 = CCYYMMDDHHMM** Calendar date including time with minutes: C=Century; Y=Year; M=Month; D=Day; H=Hour; M=Minutes.

Remark:

Example:
DTM+171:20141117:102'

Counter = Counter of segment/group in the EDIFACT directory
No = Consecutive segment number
Tag = Segment-/Group-Tag
MaxOcc = Maximum occurrence of the segment/group

St = Status
EDIFACT: M=Mandatory, C=Conditional
Application: R=Required, O=Optional, D=Dependent
A=Advised, N=Not used

Global EDI Implementation Guideline DESADV D07

NAD Buyer's name and address

Counter	No	Tag	St	Max Occ.	Level	Content
0110		**SG2**	O	1	1	Buyer
0120	13	**NAD**	M	1	1	Buyer's name and address

		Standard		Implementation		
Tag	Name	St	Format	St	Format	Remark
NAD						
3035	PARTY FUNCTION CODE QUALIFIER	M	an..3	M	an..3	**BY = Buyer** Party to which merchandise or services are sold.
C082	PARTY IDENTIFICATION DETAILS	C		R		
3039	Party identifier	M	an..35	M	an..35	Vibracoustic company code.
1131	Code list identification code	C	an..17	N		
3055	Code list responsible agency code	C	an..3	R	an..3	Code specifying the agency responsible for a code list. **92 = Assigned by buyer or buyer's agent**
C058	NAME AND ADDRESS	C		N		
3124	Name and address description	M	an..35	N		
3124	Name and address description	C	an..35	N		
3124	Name and address description	C	an..35	N		
3124	Name and address description	C	an..35	N		
3124	Name and address description	C	an..35	N		
C080	PARTY NAME	C		R		
3036	Party name	M	an..35	M	an..35	Vibracoustic company name.
3036	Party name	C	an..35	N		
3036	Party name	C	an..35	N		
3036	Party name	C	an..35	N		
3036	Party name	C	an..35	N		
3045	Party name format code	C	an..3	N		
C059	STREET	C		O		
3042	Street and number or post office box identifier	M	an..35	M	an..35	The name that identifies the location of a house or building: usually within a street as part of an address.
3042	Street and number or post office box identifier	C	an..35	N		
3042	Street and number or post office box identifier	C	an..35	N		
3042	Street and number or post office box identifier	C	an..35	N		
3164	CITY NAME	C	an..35	O	an..35	The name of the city, town, or village of this address.
C819	COUNTRY SUBDIVISION DETAILS	C		N		
3229	Country subdivision identifier	C	an..9	N		
1131	Code list identification code	C	an..17	N		
3055	Code list responsible agency code	C	an..3	N		
3228	Country subdivision name	C	an..70	N		
3251	POSTAL IDENTIFICATION CODE	C	an..17	O	an..17	Code specifying the postal zone or address.
3207	COUNTRY IDENTIFIER	C	an..3	O	a2	Provides the country part of an address using a code. Use ISO 3166-1 two alpha country code.

Remark:
Vibracoustic company identification.

Example:
NAD+BY+0014::92++Vibracoustic GmbH & Co KG+Höhnerweg, 2 - 4+Weinheim++69465+DE'

Counter = Counter of segment/group in the EDIFACT directory
No = Consecutive segment number
Tag = Segment-/Group-Tag
MaxOcc = Maximum occurrence of the segment/group

St = Status
EDIFACT: M=Mandatory, C=Conditional
Application: R=Required, O=Optional, D=Dependent
A=Advised, N=Not used

Global EDI Implementation Guideline DESADV D07

NAD Issuer's name and address

Counter	No	Tag	St	Max Occ.	Level	Content
0110		**SG2**	R	1	1	Issuer/Plant
0120	14	**NAD**	M	1	1	Issuer's name and address

		Standard		Implementation		
Tag	Name	St	Format	St	Format	Remark
NAD						
3035	PARTY FUNCTION CODE QUALIFIER	M	an..3	M	an..3	**MI = Planning schedule/material release issuer** A party issuing a planning schedule/material release.
C082	PARTY IDENTIFICATION DETAILS	C		R		
3039	Party identifier	M	an..35	M	an..35	Vibracoustic plant code.
1131	Code list identification code	C	an..17	N		
3055	Code list responsible agency code	C	an..3	R	an..3	Code specifying the agency responsible for a code list. **92 = Assigned by buyer or buyer's agent**
C058	NAME AND ADDRESS	C		N		
3124	Name and address description	M	an..35	N		
3124	Name and address description	C	an..35	N		
3124	Name and address description	C	an..35	N		
3124	Name and address description	C	an..35	N		
3124	Name and address description	C	an..35	N		
C080	PARTY NAME	C		R		
3036	Party name	M	an..35	M	an..35	Vibracoustic Plant name.
3036	Party name	C	an..35	N		
3036	Party name	C	an..35	N		
3036	Party name	C	an..35	N		
3036	Party name	C	an..35	N		
3045	Party name format code	C	an..3	N		
C059	STREET	C		O		
3042	Street and number or post office box identifier	M	an..35	M	an..35	The name that identifies the location of a house or building: usually within a street as part of an address.
3042	Street and number or post office box identifier	C	an..35	N		
3042	Street and number or post office box identifier	C	an..35	N		
3042	Street and number or post office box identifier	C	an..35	N		
3164	CITY NAME	C	an..35	O	an..35	The name of the city, town, or village of this address.
C819	COUNTRY SUBDIVISION DETAILS	C		N		
3229	Country subdivision identifier	C	an..9	N		
1131	Code list identification code	C	an..17	N		
3055	Code list responsible agency code	C	an..3	N		
3228	Country subdivision name	C	an..70	N		
3251	POSTAL IDENTIFICATION CODE	C	an..17	O	an..17	Code specifying the postal zone or address.
3207	COUNTRY IDENTIFIER	C	an..3	O	a2	Provides the country part of an address using a code. Use ISO 3166-1 two alpha country code.

Remark:
Vibracoustic plant identification.

Example:
NAD+MI+1513::92++Vibracoustic GmbH & Co KG:Werk Hamburg +Hörstener Straße 47+Hamburg++21079+DE'

Counter = Counter of segment/group in the EDIFACT directory
No = Consecutive segment number
Tag = Segment-/Group-Tag
MaxOcc = Maximum occurrence of the segment/group

St = Status
EDIFACT: M=Mandatory, C=Conditional
Application: R=Required, O=Optional, D=Dependent
A=Advised, N=Not used

Global EDI Implementation Guideline DESADV D07

NAD Seller's name and address

Counter	No	Tag	St	Max Occ.	Level	Content
0110		**SG2**	R	1	1	Seller/Supplier
0120	15	**NAD**	M	1	1	Seller's name and address

		Standard		Implementation		
Tag	Name	St	Format	St	Format	Remark
NAD						
3035	PARTY FUNCTION CODE QUALIFIER	M	an..3	M	an..3	**SE = Seller** Party selling merchandise or services to a buyer.
C082	PARTY IDENTIFICATION DETAILS	C		R		
3039	Party identifier	M	an..35	M	an..35	Local supplier number assigned by Vibracoustic.
1131	Code list identification code	C	an..17	N		
3055	Code list responsible agency code	C	an..3	R	an..3	Code specifying the agency responsible for a code list. **92 = Assigned by buyer or buyer's agent**
C058	NAME AND ADDRESS	C		N		
3124	Name and address description	M	an..35	N		
3124	Name and address description	C	an..35	N		
3124	Name and address description	C	an..35	N		
3124	Name and address description	C	an..35	N		
3124	Name and address description	C	an..35	N		
C080	PARTY NAME	C		R		
3036	Party name	M	an..35	M	an..35	Seller's name.
3036	Party name	C	an..35	N		
3036	Party name	C	an..35	N		
3036	Party name	C	an..35	N		
3036	Party name	C	an..35	N		
3045	Party name format code	C	an..3	N		
C059	STREET	C		O		
3042	Street and number or post office box identifier	M	an..35	M	an..35	The name that identifies the location of a house or building: usually within a street as part of an address.
3042	Street and number or post office box identifier	C	an..35	N		
3042	Street and number or post office box identifier	C	an..35	N		
3042	Street and number or post office box identifier	C	an..35	N		
3164	CITY NAME	C	an..35	O	an..35	The name of the city, town, or village of this address.
C819	COUNTRY SUBDIVISION DETAILS	C		N		
3229	Country subdivision identifier	C	an..9	N		
1131	Code list identification code	C	an..17	N		
3055	Code list responsible agency code	C	an..3	N		
3228	Country subdivision name	C	an..70	N		
3251	POSTAL IDENTIFICATION CODE	C	an..17	O	an..17	Code specifying the postal zone or address.
3207	COUNTRY IDENTIFIER	C	an..3	O	a2	Provides the country part of an address using a code. Use ISO 3166-1 two alpha country code.

Remark:

Example:
NAD+SE+100374::92++Beltan Vibracoustic Titresim+Sari Cadde No., 10+Bursa++16140+TR'

Counter = Counter of segment/group in the EDIFACT directory
No = Consecutive segment number
Tag = Segment-/Group-Tag
MaxOcc = Maximum occurrence of the segment/group

St = Status
EDIFACT: M=Mandatory, C=Conditional
Application: R=Required, O=Optional, D=Dependent
A=Advised, N=Not used

Global EDI Implementation Guideline DESADV D07

RFF Seller's DUNS number

Counter	No	Tag	St	Max Occ.	Level	Content
0110		**SG2**	R	1	1	Seller/Supplier
0140		**SG3**	R	1	2	Additional Party ID (DUNS)
0150	16	**RFF**	M	1	2	Seller's DUNS number

		Standard		Implementation		
Tag	Name	St	Format	St	Format	Remark
RFF						
C506	REFERENCE	M		M		
1153	Reference code qualifier	M	an..3	M	an..3	Code qualifying a reference. **ANK = Reference number assigned by third party**
1154	Reference identifier	C	an..70	R	n9	Seller's DUNS number.
1156	Document line identifier	C	an..6	N		
1056	Version identifier	C	an..9	N		
1060	Revision identifier	C	an..6	N		

Remark:

This segment can be used to transmit the DUNS number of the business partner, in addition to the customer number or the supplier number.
If Seller and Ship from are equal. Then the DUNS number used to print the label should be replicated in the Seller and Ship from partner information of the DESADV.
If Seller and Ship from are different. If the Ship from print the labels and send the EDI message, then the Duns number informed at the level of the SF will be used for building the Licence plate. The SF Duns number is mandatory in the EDI message.
If Seller and Ship from are different. If the Seller print the labels and send the EDI message, then the Duns number informed at the level of the Vendor will be used for building the Licence plate. The SE Duns number is mandatory in the EDI message. In the DESADV, the SF Duns number has to be empty or should contain the same value than the Seller DUNS number.

Example:

RFF+ANK:012345678'

Counter = Counter of segment/group in the EDIFACT directory
No = Consecutive segment number
Tag = Segment-/Group-Tag
MaxOcc = Maximum occurrence of the segment/group

St = Status
EDIFACT: M=Mandatory, C=Conditional
Application: R=Required, O=Optional, D=Dependent
A=Advised, N=Not used

Global EDI Implementation Guideline DESADV D07

NAD Ship From's name and address

Counter	No	Tag	St	Max Occ.	Level	Content
0110		**SG2**	R	1	1	Ship From
0120	17	**NAD**	M	1	1	Ship From's name and address

		Standard		Implementation		
Tag	Name	St	Format	St	Format	Remark
NAD						
3035	PARTY FUNCTION CODE QUALIFIER	M	an..3	M	an..3	**SF = Ship from** Identification of the party from where goods will be or have been shipped.
C082	PARTY IDENTIFICATION DETAILS	C		R		
3039	Party identifier	M	an..35	M	an..35	Unique identification of a party by an ID.
1131	Code list identification code	C	an..17	N		
3055	Code list responsible agency code	C	an..3	R	an..3	Code specifying the agency responsible for a code list. **92 = Assigned by buyer or buyer's agent**
C058	NAME AND ADDRESS	C		N		
3124	Name and address description	M	an..35	N		
3124	Name and address description	C	an..35	N		
3124	Name and address description	C	an..35	N		
3124	Name and address description	C	an..35	N		
3124	Name and address description	C	an..35	N		
C080	PARTY NAME	C		R		
3036	Party name	M	an..35	M	an..35	Ship from's name.
3036	Party name	C	an..35	N		
3036	Party name	C	an..35	N		
3036	Party name	C	an..35	N		
3036	Party name	C	an..35	N		
3045	Party name format code	C	an..3	N		
C059	STREET	C		O		
3042	Street and number or post office box identifier	M	an..35	M	an..35	The name that identifies the location of a house or building: usually within a street as part of an address.
3042	Street and number or post office box identifier	C	an..35	N		
3042	Street and number or post office box identifier	C	an..35	N		
3042	Street and number or post office box identifier	C	an..35	N		
3164	CITY NAME	C	an..35	O	an..35	The name of the city, town, or village of this address.
C819	COUNTRY SUBDIVISION DETAILS	C		N		
3229	Country subdivision identifier	C	an..9	N		
1131	Code list identification code	C	an..17	N		
3055	Code list responsible agency code	C	an..3	N		
3228	Country subdivision name	C	an..70	N		
3251	POSTAL IDENTIFICATION CODE	C	an..17	O	an..17	Code specifying the postal zone or address.
3207	COUNTRY IDENTIFIER	C	an..3	O	a2	Provides the country part of an address using a code. Use ISO 3166-1 two alpha country code.

Remark:
Party that despatches the goods or makes them ready for collection. It can be the same than NAD+SE.

Example:
NAD+SF+100374::92++Beltan Vibracoustic Titresim+Sari Cadde No., 10+Bursa++16140+TR'

Counter = Counter of segment/group in the EDIFACT directory
No = Consecutive segment number
Tag = Segment-/Group-Tag
MaxOcc = Maximum occurrence of the segment/group

St = Status
EDIFACT: M=Mandatory, C=Conditional
Application: R=Required, O=Optional, D=Dependent
A=Advised, N=Not used

Global EDI Implementation Guideline DESADV D07

RFF Ship From's DUNS number

Counter	No	Tag	St	Max Occ.	Level	Content
0110		**SG2**	R	1	1	Ship From
0140		**SG3**	D	1	2	Additional Party ID (DUNS)
0150	18	**RFF**	M	1	2	Ship From's DUNS number

		Standard		Implementation		
Tag	Name	St	Format	St	Format	Remark
RFF						
C506	REFERENCE	M		M		
1153	Reference code qualifier	M	an..3	M	an..3	Code qualifying a reference. **ANK = Reference number assigned by third party**
1154	Reference identifier	C	an..70	R	n9	Ship From's DUNS number.
1156	Document line identifier	C	an..6	N		
1056	Version identifier	C	an..9	N		
1060	Revision identifier	C	an..6	N		

Remark:

This segment can be used to transmit the DUNS number of the business partner, in addition to the customer number or the supplier number.
If Seller and Ship from are equal. Then the DUNS number used to print the label should be replicated in the Seller and Ship from partner information of the DESADV.
If Seller and Ship from are different. If the Ship from print the labels and send the EDI message, then the Duns number informed at the level of the SF will be used for building the Licence plate. The SF Duns number is mandatory in the EDI message.
If Seller and Ship from are different. If the Seller print the labels and send the EDI message, then the Duns number informed at the level of the Vendor will be used for building the Licence plate. The SE Duns number is mandatory in the EDI message. In the DESADV, the SF Duns number has to be empty or should contain the same value than the Seller DUNS number.

Example:

RFF+ANK:012345679'

Counter = Counter of segment/group in the EDIFACT directory
No = Consecutive segment number
Tag = Segment-/Group-Tag
MaxOcc = Maximum occurrence of the segment/group

St = Status
EDIFACT: M=Mandatory, C=Conditional
Application: R=Required, O=Optional, D=Dependent
A=Advised, N=Not used

Global EDI Implementation Guideline DESADV D07

NAD Ship-to's name and address

Counter	No	Tag	St	Max Occ.	Level	Content
0110		**SG2**	R	1	1	Ship to
0120	19	**NAD**	M	1	1	Ship-to's name and address

		Standard		Implementation		
Tag	Name	St	Format	St	Format	Remark
NAD						
3035	PARTY FUNCTION CODE QUALIFIER	M	an..3	M	an..3	**ST = Ship-to** Identification of the party to where goods will be or have been shipped.
C082	PARTY IDENTIFICATION DETAILS	C		R		
3039	Party identifier	M	an..35	M	an..35	Unique identification of a party by an ID.
1131	Code list identification code	C	an..17	N		
3055	Code list responsible agency code	C	an..3	C	an..3	Code specifying the agency responsible for a code list. **92 = Assigned by buyer or buyer's agent**
C058	NAME AND ADDRESS	C		N		
3124	Name and address description	M	an..35	N		
3124	Name and address description	C	an..35	N		
3124	Name and address description	C	an..35	N		
3124	Name and address description	C	an..35	N		
3124	Name and address description	C	an..35	N		
C080	PARTY NAME	C		R		
3036	Party name	M	an..35	M	an..35	Ship-to's name.
3036	Party name	C	an..35	N		
3036	Party name	C	an..35	N		
3036	Party name	C	an..35	N		
3036	Party name	C	an..70	N		
3045	Party name format code	C	an..3	N		
C059	STREET	C		O		
3042	Street and number or post office box identifier	M	an..35	M	an..35	The name that identifies the location of a house or building: usually within a street as part of an address.
3042	Street and number or post office box identifier	C	an..35	N		
3042	Street and number or post office box identifier	C	an..35	N		
3042	Street and number or post office box identifier	C	an..35	N		
3164	CITY NAME	C	an..35	O	an..35	The name of the city, town, or village of this address.
C819	COUNTRY SUBDIVISION DETAILS	C		N		
3229	Country subdivision identifier	C	an..9	N		
1131	Code list identification code	C	an..17	N		
3055	Code list responsible agency code	C	an..3	N		
3228	Country subdivision name	C	an..70	N		
3251	POSTAL IDENTIFICATION CODE	C	an..17	O	an..17	Code specifying the postal zone or address
3207	COUNTRY IDENTIFIER	C	an..3	O	a2	Provides the country part of an address using a code. Use ISO 3166-1 two alpha country code.

Remark:
The party to which goods are to be shipped (consigned): Vibracoustic plant code, External Warehouse, Subcontractor, etc.

Example:
NAD+ST+1513::92++Vibracoustic GmbH & Co KG:Werk Hamburg +Hörstener Straße 47+Hamburg++21079+DE'

Counter = Counter of segment/group in the EDIFACT directory
No = Consecutive segment number
Tag = Segment-/Group-Tag
MaxOcc = Maximum occurrence of the segment/group

St = Status
EDIFACT: M=Mandatory, C=Conditional
Application: R=Required, O=Optional, D=Dependent
A=Advised, N=Not used

Global EDI Implementation Guideline DESADV D07

CPS Consignment packing sequence

Counter	No	Tag	St	Max Occ.	Level	Content
0390		**SG10**	O	9999	1	Despatch control line / List of handling unit groups
		Either outer or intermediate packaging item Handling units are only used, when multiple levels of packaging have to be described				
0400	20	**CPS**	M	1	1	Consignment packing sequence

		Standard		Implementation		
Tag	Name	St	Format	St	Format	Remark
CPS						
7164	HIERARCHICAL STRUCTURE LEVEL IDENTIFIER	M	an..35	M	n..6	To identify a level within a hierarchical structure. Line Number. Incremented counter generated by message sender, assigned to a packaging group in the message. We recommend starting at 1.
7166	HIERARCHICAL STRUCTURE PARENT IDENTIFIER	C	an..35	N		
7075	PACKAGING LEVEL CODE	C	an..3	R	an..3	Code specifying a level of packaging. **2 = Intermediate** Level of packaging, if it exists, that is immediately subordinate to the outer packaging level. **3 = Outer** For packed merchandise, outermost level of packaging for a shipment.

Remark:

With SG10 identified as handling unit / intermediate packaging level, there is no article item (SG17), as these are always preceded by the inner packaging.
The packaging structure must be entered in the message from the outside inwards, i.e. handling unit, followed by packaging units; main packaging followed by packaging aids.

If different packaging materials have the same properties (same packaging type, same packaging aids, same volume, same part number) they should be combined into one packaging group.
For each outer packaging, the number/identifier of the packaging units at the next level is listed. This applies accordingly to any intermediate packaging units.

The values of this Line Number shall not duplicate other occurrences of the CPS.

Example:

CPS+1++3'

Counter = Counter of segment/group in the EDIFACT directory
No = Consecutive segment number
Tag = Segment-/Group-Tag
MaxOcc = Maximum occurrence of the segment/group

St = Status
EDIFACT: M=Mandatory, C=Conditional
Application: R=Required, O=Optional, D=Dependent
A=Advised, N=Not used

Global EDI Implementation Guideline DESADV D07

PAC Package

Counter	No	Tag	St	Max Occ.	Level	Content
0390		**SG10**	O	9999	1	Despatch control line / List of handling unit groups
0430		**SG11**	R	9999	2	Handling unit group details
		Used to describe either a handling unit type or a package type corresponding to a certain design specifying characteristics such as dimensions, material, etc For each particular instance of usage, the specific meaning applicable (handling unit type or package type) can easily be deduced from the context.				
0440	21	**PAC**	M	1	2	Package

		Standard		Implementation		
Tag	Name	St	Format	St	Format	Remark
PAC						
7224	PACKAGE QUANTITY	C	n..8	R	n..8	To specify the number of packages. Number of identical Handling Units belonging to this group.
C531	PACKAGING DETAILS	C		R		
7075	Packaging level code	C	an..3	N		
7233	Packaging related description code	C	an..3	R	an..3	Code specifying information related to packaging. **35 = Type of package** The information is related to the type of package.
7073	Packaging terms and conditions code	C	an..3	O	an..3	Code specifying the packaging terms and conditions. **1 = Packaging cost paid by supplier** The cost of packaging is paid by the supplier. **2 = Packaging cost paid by recipient** The cost of packaging is paid by the recipient. **11 = Multiple usage buyer's durable** Reusable multi-purpose packaging owned by the buyer. **12 = Multiple usage seller's durable** Reusable multi-purpose packaging owned by the seller. **13 = Not packed** The referenced item is to be supplied without packaging. Codes 1 and 2 indicate non-returnable packaging.
C202	PACKAGE TYPE	C		R		
7065	Package type description code	C	an..17	R	an..17	Vibracoustic packaging code.
1131	Code list identification code	C	an..17	N		
3055	Code list responsible agency code	C	an..3	R	an..3	Code specifying the agency responsible for a code list. **92 = Assigned by buyer or buyer's agent** Codes assigned by a buyer or buyer's agent.
7064	Type of packages	C	an..35	N		
C402	PACKAGE TYPE IDENTIFICATION	C		N		
7077	Description format code	M	an..3	N		
7064	Type of packages	M	an..35	N		
7143	Item type identification code	C	an..3	N		
7064	Type of packages	C	an..35	N		
7143	Item type identification code	C	an..3	N		
C532	RETURNABLE PACKAGE DETAILS	C				
8395	Returnable package freight payment responsibility code	C	an..3	N		

Counter = Counter of segment/group in the EDIFACT directory
No = Consecutive segment number
Tag = Segment-/Group-Tag
MaxOcc = Maximum occurrence of the segment/group

St = Status
EDIFACT: M=Mandatory, C=Conditional
Application: R=Required, O=Optional, D=Dependent
A=Advised, N=Not used

Global EDI Implementation Guideline DESADV D07

		Standard		Implementation		
Tag	Name	St	Format	St	Format	Remark
8393	Returnable package load contents code	C	an..3	N		

Remark:
This variant of SG11 is used to describe the simplified type of handling units or shipping packaging units that corresponds to a specific design, with specifying properties such as dimensions, material, etc. Similar packages must be combined in one SG11. For grouping criteria, see the process description and the packaging examples at the end of this guideline.

The number of packages corresponds to the total number of packages of the same type (given in data element 7065). They may be in one or more handling units.

Example:
PAC+1+:35:11+L1896::92'

Global EDI Implementation Guideline DESADV D07

QTY Maximum stackability

Counter	No	Tag	St	Max Occ.	Level	Content
0390		**SG10**	O	9999	1	Despatch control line / List of handling unit groups
0430		**SG11**	R	9999	2	Handling unit group details
0460	22	**QTY**	O	1	3	Maximum stackability

		Standard		Implementation		
Tag	Name	St	Format	St	Format	Remark
QTY						
C186	QUANTITY DETAILS	M		M		
6063	Quantity type code qualifier	M	an..3	M	an..3	Code qualifying the type of quantity. **171 = Maximum stackability** The number of pallets/handling units which can be safely stacked one on top of another.
6060	Quantity	M	an..35	R	an..3	Maximum number of packages, which might be stacked on top of each other without causing damage.
6411	Measurement unit code	C	an..8	M	an..8	Code specifying the unit of measurement. **C62 = One** Use UN/ECE Recommendation 20.

Remark:
Maximum number of packages that might be stacked one on top of the other.
Encoded form: 1 = single layer, 2 = two layers, etc.

Example:
QTY+171:2:C62'

Counter = Counter of segment/group in the EDIFACT directory
No = Consecutive segment number
Tag = Segment-/Group-Tag
MaxOcc = Maximum occurrence of the segment/group

St = Status
EDIFACT: M=Mandatory, C=Conditional
Application: R=Required, O=Optional, D=Dependent
A=Advised, N=Not used

Global EDI Implementation Guideline DESADV D07

QTY Number of contained packages/items

Counter	No	Tag	St	Max Occ.	Level	Content
0390		**SG10**	O	9999	1	Despatch control line / List of handling unit groups
0430		**SG11**	R	9999	2	Handling unit group details
0460	23	**QTY**	R	1	3	Number of contained packages/items

		Standard		Implementation		
Tag	Name	St	Format	St	Format	Remark
QTY						
C186	QUANTITY DETAILS	M		M		
6063	Quantity type code qualifier	M	an..3	M	an 3	Code qualifying the type of quantity. **189 = Number of packages in handling unit** The number of packages contained in one handling unit.
6060	Quantity	M	an..35	M	n 6	Number of packages in the Handling Unit.
6411	Measurement unit code	C	an..8	M	an..8	Code specifying the unit of measurement. **C62 = One** Use UN/ECE Recommendation 20.

Remark:
Required for handling units with master label. Quantity of packages per handling unit. Only packaging of the next inner level is counted. Used at this level, if equal for all individual handling units.

Example:
QTY+189:8:C62'

Counter = Counter of segment/group in the EDIFACT directory
No = Consecutive segment number
Tag = Segment-/Group-Tag
MaxOcc = Maximum occurrence of the segment/group

St = Status
EDIFACT: M=Mandatory, C=Conditional
Application: R=Required, O=Optional, D=Dependent
A=Advised, N=Not used

Global EDI Implementation Guideline DESADV D07

PCI Handling unit label type

Counter	No	Tag	St	Max Occ.	Level	Content
0390		**SG10**	O	9999	1	Despatch control line / List of handling unit groups
0430		**SG11**	R	9999	2	Handling unit group details
0500		**SG13**	R	1000	3	List of individual handling units
0510	24	**PCI**	M	1	3	Handling unit label type

		Standard		Implementation		
Tag	Name	St	Format	St	Format	Remark
PCI						
4233	MARKING INSTRUCTIONS CODE	C	an..3	R	an..3	Code specifying instructions for marking. **17 = Seller's instructions** Markings as specified by the seller.
C210	MARKS & LABELS	C		N		
7102	Shipping marks description	M	an..35	N		
7102	Shipping marks description	C	an..35	N		
7102	Shipping marks description	C	an..35	N		
7102	Shipping marks description	C	an..35	N		
7102	Shipping marks description	C	an..35	N		
7102	Shipping marks description	C	an..35	N		
7102	Shipping marks description	C	an..35	N		
7102	Shipping marks description	C	an..35	N		
7102	Shipping marks description	C	an..35	N		
7102	Shipping marks description	C	an..35	N		
8169	FULL OR EMPTY INDICATOR CODE	C	an..3	N		
C827	TYPE OF MARKING	C		R		
7511	Marking type code	M	an..3	M	an..3	Code specifying the type of marking. Handling Unit category. The Label identifier is the first part of a transport label. It identifies the label as outer or inner package label. **6J = Unique license plate number assigned to a master load** 6J corresponds to former code "M" = master label.
1131	Code list identification code	C	an..17	N		
3055	Code list responsible agency code	C	an..3	R	an..3	Code list responsible agency code. **5 = ISO (International Organization for Standardization)** International Organization of Standardization.

Remark:
Each segment group 13 represents exactly one handling unit with its components/properties. Mixed pallets are not allowed.

Example:
PCI+17+++6J::5'

Counter = Counter of segment/group in the EDIFACT directory
No = Consecutive segment number
Tag = Segment-/Group-Tag
MaxOcc = Maximum occurrence of the segment/group

St = Status
EDIFACT: M=Mandatory, C=Conditional
Application: R=Required, O=Optional, D=Dependent
A=Advised, N=Not used

Global EDI Implementation Guideline DESADV D07

GIN Individual handling unit's transport label number

Counter	No	Tag	St	Max Occ.	Level	Content
0390		**SG10**	O	9999	1	Despatch control line / List of handling unit groups
0430		**SG11**	R	9999	2	Handling unit group details
0500		**SG13**	R	1000	3	List of individual handling units
0570		**SG15**	R	1	4	Individual handling unit's transport label number
0580	25	**GIN**	M	1	4	Individual handling unit's transport label number

		Standard		Implementation		
Tag	Name	St	Format	St	Format	Remark
GIN						
7405	OBJECT IDENTIFICATION CODE QUALIFIER	M	an..3	M	an..3	Code qualifying the identification of an object. **ML = Marking/label number** The number on the marking or label.
C208	IDENTITY NUMBER RANGE	M		M		
7402	Object identifier	M	an..35	M	n9	Label ID of handling unit.
7402	Object identifier	C	an..35	N		
C208	IDENTITY NUMBER RANGE	C		N		
7402	Object identifier	M	an..35	N		
7402	Object identifier	C	an..35	N		
C208	IDENTITY NUMBER RANGE	C		N		
7402	Object identifier	M	an..35	N		
7402	Object identifier	C	an..35	N		
C208	IDENTITY NUMBER RANGE	C		N		
7402	Object identifier	M	an..35	N		
7402	Object identifier	C	an..35	N		
C208	IDENTITY NUMBER RANGE	C		N		
7402	Object identifier	M	an..35	N		
7402	Object identifier	C	an..35	N		

Remark:
Package number of handling unit.
Main packaging does always have a package number. Auxiliary packaging does not have a package number.
The label ID of handling unit is not permitted to repeat within five year.

Example:
GIN+ML+210083724'

Counter = Counter of segment/group in the EDIFACT directory
No = Consecutive segment number
Tag = Segment-/Group-Tag
MaxOcc = Maximum occurrence of the segment/group

St = Status
EDIFACT: M=Mandatory, C=Conditional
Application: R=Required, O=Optional, D=Dependent
A=Advised, N=Not used

GIN Individual packaging item's label numbers

Counter	No	Tag	St	Max Occ.	Level	Content
0390		SG10	O	9999	1	Despatch control line / List of handling unit groups
0430		SG11	R	9999	2	Handling unit group details
0500		SG13	R	1000	3	List of individual handling units
0570		SG15	R	98	4	Individual handling unit's label numbers
0580	26	GIN	M	1	4	Individual packaging item's label numbers

		Standard		Implementation		
Tag	Name	St	Format	St	Format	Remark
GIN						
7405	OBJECT IDENTIFICATION CODE QUALIFIER	M	an..3			Code qualifying the identification of an object. **AW = Serial shipping container code** A single unique serial number which identifies shipping containers or shipping packages.
C208	IDENTITY NUMBER RANGE	M		M		
7402	Object identifier	M	an..35	M	n9	ID of package(s) contained in an outer or an intermediate Package. In case of a range of IDs this is the first ID.
7402	Object identifier	C	an..35	O	n9	ID of package(s) contained in an outer or an intermediate Package.
C208	IDENTITY NUMBER RANGE	C		O		Further label numbers of contained packages.
7402	Object identifier	M	an..35	M	n9	
7402	Object identifier	C	an..35	O	n9	
C208	IDENTITY NUMBER RANGE	C		O		Further label numbers of contained packages.
7402	Object identifier	M	an..35	M	n9	
7402	Object identifier	C	an..35	O	n9	
C208	IDENTITY NUMBER RANGE	C		O		Further label numbers of contained packages.
7402	Object identifier	M	an..35	M	n9	
7402	Object identifier	C	an..35	O	n9	
C208	IDENTITY NUMBER RANGE	C		O		Further label numbers of contained packages.
7402	Object identifier	M	an..35	M	n9	
7402	Object identifier	C	an..35	O	n9	

Remark:

List or range of serial numbers of packages contained in the identified handling unit.

Example:

GIN+AW+110081010:110081015+1100810717+110081019'

Global EDI Implementation Guideline DESADV D07

PAC Package

Counter	No	Tag	St	Max Occ.	Level	Content
0390		**SG10**	O	9999	1	Despatch control line / List of handling unit groups
0430		**SG11**	O	9999	2	Packaging aid
0440	27	**PAC**	M	1	2	Package

		Standard		Implementation		
Tag	Name	St	Format	St	Format	Remark
PAC						
7224	PACKAGE QUANTITY	C	n..8	R	n..8	Actual number of packages, e.g. belonging to a group of packages. Considered to be a number of identical packages.
C531	PACKAGING DETAILS	C		R		
7075	Packaging level code	C	an..3	N		
7233	Packaging related description code	C	an..3	R	an..3	Code specifying information related to packaging. **37 = Package protection** The information is related to protection of the package. Code 37 is used to identify a packaging aid.
7073	Packaging terms and conditions code	C	an..3	R	an..3	Code specifying the packaging terms and conditions. **1 = Packaging cost paid by supplier** The cost of packaging is paid by the supplier. **2 = Packaging cost paid by recipient** The cost of packaging is paid by the recipient. **11 = Multiple usage buyer's durable** Reusable multi-purpose packaging owned by the buyer. **12 = Multiple usage seller's durable** Reusable multi-purpose packaging owned by the seller. Codes 1 and 2 indicate non-returnable packaging.
C202	PACKAGE TYPE	C		R		
7065	Package type description code	C	an..17	R	an..17	Vibracoustic packaging code.
1131	Code list identification code	C	an..17	N		
3055	Code list responsible agency code	C	an..3	R	an..3	Code specifying the agency responsible for a code list **92 = Assigned by buyer or buyer's agent** Codes assigned by a buyer or buyer's agent.
7064	Type of packages	C	an..35	N		
C402	PACKAGE TYPE IDENTIFICATION	C		N		
7077	Description format code	M	an..3	N		
7064	Type of packages	M	an..35	N		
7143	Item type identification code	C	an..3	N		
7064	Type of packages	C	an..35	N		
7143	Item type identification code	C	an..3	N		
C532	RETURNABLE PACKAGE DETAILS	C		N		
8395	Returnable package freight payment responsibility code	C	an..3	N		
8393	Returnable package load contents code	C	an..3	N		

Remark:
Auxiliary packaging or empty inner packaging.

Example:
PAC+1+:37:11+AUXL1896::92'

Counter = Counter of segment/group in the EDIFACT directory
No = Consecutive segment number
Tag = Segment-/Group-Tag
MaxOcc = Maximum occurrence of the segment/group

St = Status
EDIFACT: M=Mandatory, C=Conditional
Application: R=Required, O=Optional, D=Dependent
A=Advised, N=Not used

Global EDI Implementation Guideline DESADV D07

CPS Consignment packing sequence

Counter	No	Tag	St	Max Occ.	Level	Content
0390		**SG10**	R	9999	1	Despatch control line / group of inner packaging items and article line
0400	28	**CPS**	M	1	1	Consignment packing sequence

		Standard		Implementation		
Tag	Name	St	Format	St	Format	Remark
CPS						
7164	HIERARCHICAL STRUCTURE LEVEL IDENTIFIER	M	an..35	M	n..6	To identify a level within a hierarchical structure. Line Number. Incremented counter generated by message sender, assigned to a packaging group in the message. We recommend starting at 1.
7166	HIERARCHICAL STRUCTURE PARENT IDENTIFIER	C	an..35	N		
7075	PACKAGING LEVEL CODE	C	an..3	R	an..3	Code specifying a level of packaging. **1 = Inner** Level of packing, if it exists, that is immediately subordinate to the intermediate packaging level. **4 = No packaging hierarchy** There is no specifiable level of packaging: packaging is inner and outer level as well. If Code 4 is used, no parent relationship exists (simplified handling unit concept).

Remark:

The message is structured from the outside inwards. First enter the handling units, then packaging items contained in the handling units. For detailed instructions see the examples at the end of this guideline.
As the message does not necessarily contain one-to-one relationships between batch, best before date and delivery note item, generate a separate SG 10 with trigger CPS for each batch number, production date, last use date, etc.

The values of this Line Number shall not duplicate other occurrences of the CPS.

Example:

CPS+2++1'

Counter = Counter of segment/group in the EDIFACT directory
No = Consecutive segment number
Tag = Segment-/Group-Tag
MaxOcc = Maximum occurrence of the segment/group

St = Status
EDIFACT: M=Mandatory, C=Conditional
Application: R=Required, O=Optional, D=Dependent
A=Advised, N=Not used

Global EDI Implementation Guideline DESADV D07

PAC Package

Counter	No	Tag	St	Max Occ.	Level	Content
0390		**SG10**	R	9999	1	Despatch control line / group of inner packaging items and article line
0430		**SG11**	R	9999	2	Group of inner packaging items
0440	29	**PAC**	M	1	2	Package

		Standard		Implementation		
Tag	Name	St	Format	St	Format	Remark
PAC						
7224	PACKAGE QUANTITY	C	n..8	O	n..8	Actual number of packages or handling units, e.g. belonging to a group of packages. Considered to be a number of identical packages.
C531	PACKAGING DETAILS	C		R		
7075	Packaging level code	C	an..3	R	an..3	
7233	Packaging related description code	C	an..3	R	an..3	Code specifying information related to packaging **35 = Type of package** The information is related to the type of package.
7073	Packaging terms and conditions code	C	an..3	R	an..3	Code specifying the packaging terms and conditions. **1 =Packaging cost paid by supplier** The cost of packaging is paid by the supplier. **2 = Packaging cost paid by recipient** The cost of packaging is paid by the recipient. **11 = Multiple usage buyer's durable** Reusable multi-purpose packaging owned by the buyer. **12 = Multiple usage seller's durable** Reusable multi-purpose packaging owned by the seller. **13 = Not packed** The referenced item is to be supplied without packaging. Codes 1 and 2 indicate non-returnable packaging.
C202	PACKAGE TYPE	C		R		
7065	Package type description code	C	an..17	R	an..17	Vibracoustic packaging code.
1131	Code list identification code	C	an..17	N		
3055	Code list responsible agency code	C	an..3	R	an..3	Code specifying the agency responsible for a code list **92 = Assigned by buyer or buyer's agent** Codes assigned by a buyer or buyer's agent.
7064	Type of packages	C	an..35	N		
C402	PACKAGE TYPE IDENTIFICATION	C		N		
7077	Description format code	M	an..3	N		
7064	Type of packages	M	an..35	N		
7143	Item type identification code	C	an..3	N		
7064	Type of packages	C	an..35	N		
7143	Item type identification code	C	an..3	N		
C532	RETURNABLE PACKAGE DETAILS	C		N		
8395	Returnable package freight payment responsibility code	C	an..3	N		
8393	Returnable package load contents code	C	an..3	N		

Counter = Counter of segment/group in the EDIFACT directory
No = Consecutive segment number
Tag = Segment-/Group-Tag
MaxOcc = Maximum occurrence of the segment/group

St = Status
EDIFACT: M=Mandatory, C=Conditional
Application: R=Required, O=Optional, D=Dependent
A=Advised, N=Not used

Global EDI Implementation Guideline DESADV D07

Remark:
This variant of SG11 is used to describe the simplified type of handling units or shipping packaging units that corresponds to a specific design, with specifying properties such as dimensions, material, etc. Similar packages must be combined in one SG11. For grouping criteria, see the process description and the packaging examples at the end of this guideline.

The number of packages corresponds to the total number of packages of the same type (given in data element 7065). They may be in one or more handling units.

Example:
PAC+8+:35:11+KLT3422::92'

Global EDI Implementation Guideline DESADV D07

QTY Maximum stackability

Counter	No	Tag	St	Max Occ.	Level	Content
0390		**SG10**	R	9999	1	Despatch control line / group of inner packaging items and article line
0430		**SG11**	R	9999	2	Group of inner packaging items
0460	30	**QTY**	O	1	3	Maximum stackability

		Standard		Implementation		
Tag	Name	St	Format	St	Format	Remark
QTY						
C186	QUANTITY DETAILS	M		M		
6063	Quantity type code qualifier	M	an..3	M	an..3	Code qualifying the type of quantity. **171 = Maximum stackability** The number of pallets/handling units which can be safely stacked one on top of another.
6060	Quantity	M	an..35	M	an..3	Maximum number of packages, which might be stacked on top of each other without causing damage.
6411	Measurement unit code	C	an..8	R	an..8	Code specifying the unit of measurement. **C62 = One** Use UN/ECE Recommendation 20.

Remark:
Maximum number of packages that might be stacked one on top of the other.
Encoded form: 1 = single layer, 2 = two layers, etc.

Example:
QTY+171:3:C62'

Counter = Counter of segment/group in the EDIFACT directory
No = Consecutive segment number
Tag = Segment-/Group-Tag
MaxOcc = Maximum occurrence of the segment/group

St = Status
EDIFACT: M=Mandatory, C=Conditional
Application: R=Required, O=Optional, D=Dependent
A=Advised, N=Not used

Global EDI Implementation Guideline DESADV D07

QTY Actual quantity per package

Counter	No	Tag	St	Max Occ.	Level	Content
0390		**SG10**	R	9999	1	Despatch control line / group of inner packaging items and article line
0430		**SG11**	R	9999	2	Group of inner packaging items
0460	31	**QTY**	R	1	3	Actual quantity per package

		Standard		Implementation		
Tag	Name	St	Format	St	Format	Remark
QTY						
C186	QUANTITY DETAILS	M		M		
6063	Quantity type code qualifier	M	an..3	M	an..3	Code qualifying the type of quantity. **52 = Quantity per pack** Quantity for each pack.
6060	Quantity	M	an..35	M	an..35	Quantity (actual) per package. Decimals can be used.
6411	Measurement unit code	C	an..8	M	an..8	Code specifying the unit of measurement. **PCE = Piece** **KGM = Kilogram** **LTR = Litre** **MTR = Metre** **MTK = Square metre** **MTQ = Cubic metre** **SET = Set** Use UN/ECE Recommendation 20

Remark:

Example:
QTY+52:220:PCE’

QTY+52:210.630:KGM’

Counter = Counter of segment/group in the EDIFACT directory
No = Consecutive segment number
Tag = Segment-/Group-Tag
MaxOcc = Maximum occurrence of the segment/group

St = Status
EDIFACT: M=Mandatory, C=Conditional
Application: R=Required, O=Optional, D=Dependent
A=Advised, N=Not used

Global EDI Implementation Guideline DESADV D07

PCI Package identification

Counter	No	Tag	St	Max Occ.	Level	Content
0390		**SG10**	R	9999	1	Despatch control line / group of inner packaging items and article line
0430		**SG11**	R	9999	2	Group of inner packaging items
0500		**SG13**	R	1000	3	List of individual package items
0510	32	**PCI**	M	1	3	Package identification

		Standard		Implementation		
Tag	Name	St	Format	St	Format	Remark
PCI						
4233	MARKING INSTRUCTIONS CODE	C	an..3	R	an..3	Code specifying instructions for marking. **17 = Seller's instructions** Markings as specified by the seller.
C210	MARKS & LABELS	C		N		
7102	Shipping marks description	M	an..35	N		
7102	Shipping marks description	C	an..35	N		
7102	Shipping marks description	C	an..35	N		
7102	Shipping marks description	C	an..35	N		
7102	Shipping marks description	C	an..35	N		
7102	Shipping marks description	C	an..35	N		
7102	Shipping marks description	C	an..35	N		
7102	Shipping marks description	C	an..35	N		
7102	Shipping marks description	C	an..35	N		
7102	Shipping marks description	C	an..35	N		
8169	FULL OR EMPTY INDICATOR CODE	C	an..3	N		
C827	TYPE OF MARKING	C		R		
7511	Marking type code	M	an..3	M	an..3	Code specifying the type of marking. The Label identifier is the first part of a transport label. It identifies the label as outer or inner package label. Handling Unit Category **1J = Unique license plate number lowest package level** 1J corresponds to former S = single label.
1131	Code list identification code	C	an..17	N		
3055	Code list responsible agency code	C	an..3	R	an..3	Code list responsible agency code. **5 = ISO (International Organization for Standardization)** International Organization of Standardization

Remark:

If the batch number, production date and last use date, are relevant for the parts of the batch in the container, structure SG 13 must be followed, as it allows for unambiguous assignment of the packaging ID to this data. A change in one of these values does not automatically result in a change of group/new SG 10.

Example:

PCI+17+++1J::5'

Counter = Counter of segment/group in the EDIFACT directory
No = Consecutive segment number
Tag = Segment-/Group-Tag
MaxOcc = Maximum occurrence of the segment/group

St = Status
EDIFACT: M=Mandatory, C=Conditional
Application: R=Required, O=Optional, D=Dependent
A=Advised, N=Not used

GIR Batch ID

Counter	No	Tag	St	Max Occ.	Level	Content
0390		**SG10**	R	9999	1	Despatch control line / group of inner packaging items and article line
0430		**SG11**	R	9999	2	Group of inner packaging items
0500		**SG13**	R	1000	3	List of individual package items
0540		**SG14**	O	1	4	Production batch
0550	33	**GIR**	M	1	4	Batch ID

		Standard		Implementation		
Tag	Name	St	Format	St	Format	Remark
GIR						
7297	SET TYPE CODE QUALIFIER	M	an..3	M	an..3	Code qualifying the type of set. **1 =Product** Identification of the product set.
C206	IDENTIFICATION NUMBER	M		M		
7402	Object identifier	M	an..35	M	an..15	ID of the production batch, the items in question belong to. <u>Maximum 15 characters.</u> if the production or the best before date us to be transmitted without a batch number, this field must be set to NONE, as EDIFACT requires that this field is not empty.
7405	Object identification code qualifier	C	an..3	R	an..3	Code qualifying the identification of an object. **BX = Batch number** Unique number affixed by manufacturer to a batch of products produced under similar conditions.
4405	Status description code	C	an..3	N		
C206	IDENTIFICATION NUMBER	C		N		
7402	Object identifier	M	an..35	N		
7405	Object identification code qualifier	C	an..3	N		
4405	Status description code	C	an..3	N		
C206	IDENTIFICATION NUMBER	C		N		
7402	Object identifier	M	an..35	N		
7405	Object identification code qualifier	C	an..3	N		
4405	Status description code	C	an..3	N		
C206	IDENTIFICATION NUMBER	C		N		
7402	Object identifier	M	an..35	N		
7405	Object identification code qualifier	C	an..3	N		
4405	Status description code	C	an..3	N		
C206	IDENTIFICATION NUMBER	C		N		
7402	Object identifier	M	an..35	N		
7405	Object identification code qualifier	C	an..3	N		
4405	Status description code	C	an..3	N		

Remark:
It should be noted that production batch related information can only be attached to a single individual packaging item because the packages of a range may be from different production batches.

Example:
GIR+1+560815:BX'

Global EDI Implementation Guideline DESADV D07

DTM Production date

Counter	No	Tag	St	Max Occ.	Level	Content
0390		**SG10**	R	9999	1	Despatch control line / group of inner packaging items and article line
0430		**SG11**	R	9999	2	Group of inner packaging items
0500		**SG13**	R	1000	3	List of individual package items
0540		**SG14**	O	1	4	Production batch
0560	34	**DTM**	O	1	5	Production date

		Standard		Implementation		
Tag	Name	St	Format	St	Format	Remark
DTM						
C507	DATE/TIME/PERIOD	M		M		
2005	Date or time or period function code qualifier	M	an..3	M	an..3	Code qualifying the function of a date, time or period. **94 = Production/manufacture date** Date on which goods are produced.
2380	Date or time or period text	C	an..35	R	n..12	Actual date of production.
2379	Date or time or period format code	C	an..3	R	an..3	Code specifying the representation of a date, time or period. **102 CCYYMMDD** Calendar date: C = Century ; Y = Year ; M = Month ; D = Day.

Remark:
All parts/products in a container must have the same batch number / production date / last use date (if applicable). If parts with different production dates are packed into one container (and the production date is relevant for further processing), you must generate virtual packages that are labelled accordingly (e.g. with separately generated labels). This applies accordingly to the batch number, production date and last use date. It is however NOT possible to combine parts with different production dates under one delivery note item.

Example:
DTM+94:20141101:102'

Counter = Counter of segment/group in the EDIFACT directory
No = Consecutive segment number
Tag = Segment-/Group-Tag
MaxOcc = Maximum occurrence of the segment/group

St = Status
EDIFACT: M=Mandatory, C=Conditional
Application: R=Required, O=Optional, D=Dependent
A=Advised, N=Not used

Global EDI Implementation Guideline DESADV D07

DTM Last use date

Counter	No	Tag	St	Max Occ.	Level	Content
0390		**SG10**	R	9999	1	Despatch control line / group of inner packaging items and article line
0430		**SG11**	R	9999	2	Group of inner packaging items
0500		**SG13**	R	1000	3	List of individual package items
0540		**SG14**	O	1	4	Production batch
0560	35	**DTM**	R	1	5	Last use date

		Standard		Implementation		
Tag	Name	St	Format	St	Format	Remark
DTM						
C507	DATE/TIME/PERIOD	M		M		
2005	Date or time or period function code qualifier	M	an..3	M	an..3	Code qualifying the function of a date, time or period. **36 = Expiry date**
2380	Date or time or period text	C	an..35	M	n..12	Expiry date.
2379	Date or time or period format code	C	an..3	M	an..3	Code specifying the representation of a date, time or period. **102 CCYYMMDD** Calendar date: C = Century ; Y = Year ; M = Month ; D = Day.

Remark:
All parts/products in a container must have the same batch number / production date / last use date (if applicable). If parts with different production dates are packed into one container (and the production date is relevant for further processing), you must generate virtual packages that are labelled accordingly (e.g. with separately generated labels). This applies accordingly to the batch number, production date and last use date. It is however NOT possible to combine parts with different production dates under one delivery note item.

Example:
DTM+36:20150201:102'

Counter = Counter of segment/group in the EDIFACT directory
No = Consecutive segment number
Tag = Segment-/Group-Tag
MaxOcc = Maximum occurrence of the segment/group

St = Status
EDIFACT: M=Mandatory, C=Conditional
Application: R=Required, O=Optional, D=Dependent
A=Advised, N=Not used

Global EDI Implementation Guideline DESADV D07

GIN Label serial number(s)

Counter	No	Tag	St	Max Occ.	Level	Content
0390		**SG10**	R	9999	1	Despatch control line / group of inner packaging items and article line
0430		**SG11**	R	9999	2	Group of inner packaging items
0500		**SG13**	R	1000	3	List of individual package items
0570		**SG15**	R	99	4	Label number(s)
0580	36	**GIN**	M	1	4	Label serial number(s)

		Standard		Implementation		
Tag	Name	St	Format	St	Format	Remark
GIN						
7405	OBJECT IDENTIFICATION CODE QUALIFIER	M	an..3	M	an..3	Code qualifying the identification of an object. **ML = Marking/label number** The number on the marking or label.
C208	IDENTITY NUMBER RANGE	M		M		
7402	Object identifier	M	an..35	M	n9	Label number or ID of a individual package or handling unit. In case of a range of IDs this is the first ID.
7402	Object identifier	C	an..35	O	n9	Last (serial) label ID of a range of consecutive labels.
C208	IDENTITY NUMBER RANGE	C		O		see C208 # 1
7402	Object identifier	M	an..35	M		
7402	Object identifier	C	an..35	O		
C208	IDENTITY NUMBER RANGE	C		O		see C208 # 1
7402	Object identifier	M	an..35	M		
7402	Object identifier	C	an..35	O		
C208	IDENTITY NUMBER RANGE	C		O		see C208 # 1
7402	Object identifier	M	an..35	M		
7402	Object identifier	C	an..35	O		
C208	IDENTITY NUMBER RANGE	C		O		see C208 # 1
7402	Object identifier	M	an..35	M		
7402	Object identifier	C	an..35	O		

Remark:

If correct assignment of the various package IDs is required, generate a separate SG13 for each package.
If this is not the case, the list can be transmitted with the respective IDs in the relevant GIN segment. The total number of SG15 must not exceed 99.

Example:

GIN+ML+110081010:110081015+110081017+110081019'

Global EDI Implementation Guideline DESADV D07

PAC Package

Counter	No	Tag	St	Max Occ.	Level	Content
0390		**SG10**	R	9999	1	Despatch control line / group of inner packaging items and article line
0430		**SG11**	O	9999	2	Packaging aid
0440	37	**PAC**	M	1	2	Package

		Standard		Implementation		
Tag	Name	St	Format	St	Format	Remark
PAC						
7224	PACKAGE QUANTITY	C	n..8	R	n..6	Actual number of packages, e.g. belonging to a group of packages. Considered to be a number of identical packages.
C531	PACKAGING DETAILS	C		R		
7075	Packaging level code	C	an..3	N		
7233	Packaging related description code	C	an..3	R	an..3	Code specifying information related to packaging **37 = Package protection** The information is related to protection of the package. Code 37 is used to identify a packaging aid.
7073	Packaging terms and conditions code	C	an..3	O	an..3	Code specifying the packaging terms and conditions. **1 =Packaging cost paid by supplier** The cost of packaging is paid by the supplier. **2 = Packaging cost paid by recipient** The cost of packaging is paid by the recipient. **11 = Multiple usage buyer's durable** Reusable multi-purpose packaging owned by the buyer. **12 = Multiple usage seller's durable** Reusable multi-purpose packaging owned by the seller. **13 = Not packed** The referenced item is to be supplied without packaging. Codes 1 and 2 indicate non-returnable packaging.
C202	PACKAGE TYPE	C		R		
7065	Package type description code	C	an..17	R	an..17	Vibracoustic packaging code.
1131	Code list identification code	C	an..17	N		
3055	Code list responsible agency code	C	an..3	R	an..3	**92 = Assigned by buyer or buyer's agent** Codes assigned by a buyer or buyer's agent.
7064	Type of packages	C	an..35	N		
C402	PACKAGE TYPE IDENTIFICATION	C		N		
7077	Description format code	M	an..3	N		
7064	Type of packages	M	an..35	N		
7143	Item type identification code	C	an..3	N		
7064	Type of packages	C	an..35	N		
7143	Item type identification code	C	an..3	N		
C532	RETURNABLE PACKAGE DETAILS	C		N		
8395	Returnable package freight payment responsibility code	C	an..3	N		
8393	Returnable package load contents code	C	an..3	N		

Remark:
Auxiliary Packaging.

Example:
PAC+16+:37:11+AUXKLT3422::92'

Counter = Counter of segment/group in the EDIFACT directory
No = Consecutive segment number
Tag = Segment-/Group-Tag
MaxOcc = Maximum occurrence of the segment/group

St = Status
EDIFACT: M=Mandatory, C=Conditional
Application: R=Required, O=Optional, D=Dependent
A=Advised, N=Not used

Global EDI Implementation Guideline DESADV D07

LIN Line item

Counter	No	Tag	St	Max Occ.	Level	Content
0390		**SG10**	R	9999	1	Despatch control line / group of inner packaging items and article line
0650		**SG17**	R	9999	2	Article and Despatched Article
0660	38	**LIN**	M	1	2	Line item

		Standard		Implementation		
Tag	Name	St	Format	St	Format	Remark
LIN						
1082	LINE ITEM IDENTIFIER	C	an..6	N		
1229	ACTION CODE	C	an..3	N		
C212	ITEM NUMBER IDENTIFICATION	C		R		
7140	Item identifier	C	an..35	R	an..35	Vibracoustic article ID (Part number) Note: The term article is synonym with the term item.
7143	Item type identification code	C	an..3	R	an..3	Coded identification of an item type. **IN = Buyer's item number** The item number has been allocated by the buyer.
1131	Code list identification code	C	an..17	N		
3055	Code list responsible agency code	C	an..3	N		
C829	SUB-LINE INFORMATION	C		N		
5495	Sub-line indicator code	C	an..3	N		
1082	Line item identifier	C	an..6	N		
1222	CONFIGURATION LEVEL NUMBER	C	n..2	N		
7083	CONFIGURATION OPERATION CODE	C	an..3	N		

Remark:

SG 17 must always be started after the inner packaging. Exception: simplified handling units (CPS DE 7075=4).
Mixed pallets are not allowed.
Each delivery note or delivery note item number requires a separate item line in the DESADV (SG17).

Keys for a new delivery position are (if used):
Production batch.
Production date.
Last use date.
Part number.
Delivery note number/line number.
Order reference/line number.

It is not permissible to combine two or more DESADV items under one delivery note item.

Example:

LIN+++R787000509C:IN'

Counter = Counter of segment/group in the EDIFACT directory
No = Consecutive segment number
Tag = Segment-/Group-Tag
MaxOcc = Maximum occurrence of the segment/group

St = Status
EDIFACT: M=Mandatory, C=Conditional
Application: R=Required, O=Optional, D=Dependent
A=Advised, N=Not used

Global EDI Implementation Guideline DESADV D07

PIA Additional product id

Counter	No	Tag	St	Max Occ.	Level	Content
0390		**SG10**	R	9999	1	Despatch control line / group of inner packaging items and article line
0650		**SG17**	R	9999	2	Article and Despatched Article
0670	39	**PIA**	O	1	3	Additional product id

		Standard		Implementation		
Tag	Name	St	Format	St	Format	Remark
PIA						
4347	PRODUCT IDENTIFIER CODE QUALIFIER	M	an..3	M	an..3	Code qualifying the product identifier. **1 = Additional identification** Information which specifies and qualifies product identifications.
C212	ITEM NUMBER IDENTIFICATION	M		M		
7140	Item identifier	C	an..35	R	an..35	Article number assigned by the seller
7143	Item type identification code	C	an..3	R	an..3	Coded identification of an item type. **SA = Supplier's article number** Number assigned to an article by the supplier of that article
1131	Code list identification code	C	an..17	N		
3055	Code list responsible agency code	C	an..3	N		
C212	ITEM NUMBER IDENTIFICATION	C		O		
7140	Item identifier	C	an..35	R	an..35	Reference number assigned to an engineering change by the originator. Engineering Change Number. (Only if used)
7143	Item type identification code	C	an..3	R	an..3	Coded identification of an item type. **EC = Engineering change level** Reference number indicating that a change or revision has been applied to an article's specification.
1131	Code list identification code	C	an..17	N		
3055	Code list responsible agency code	C	an..3	N		
C212	ITEM NUMBER IDENTIFICATION	C		O		
7140	Item identifier	C	an..35	R	an..35	Other characteristics: "AQP" = released material "SEC" = security sign "AS" = AQP and security sign "" = material is blocked for quality inspection (Only if used)
7143	Item type identification code	C	an..3	R	an..3	Coded identification of an item type. **EF = Material code** Code defining the material's type, surface, geometric form plus various classifying characteristics.
1131	Code list identification code	C	an..17	N		
3055	Code list responsible agency code	C	an..3	N		
C212	ITEM NUMBER IDENTIFICATION	C		N		

Counter = Counter of segment/group in the EDIFACT directory
No = Consecutive segment number
Tag = Segment-/Group-Tag
MaxOcc = Maximum occurrence of the segment/group

St = Status
EDIFACT: M=Mandatory, C=Conditional
Application: R=Required, O=Optional, D=Dependent
A=Advised, N=Not used

Global EDI Implementation Guideline DESADV D07

		Standard		Implementation		
Tag	Name	St	Format	St	Format	Remark
C212	ITEM NUMBER IDENTIFICATION	C		N		
7140	Item identifier	C	an..35	N		
7143	Item type identification code	C	an..3	N		
1131	Code list identification code	C	an..17	N		
3055	Code list responsible agency code	C	an..3	N		
C212	ITEM NUMBER IDENTIFICATION	C		N		
7140	Item identifier	C	an..35	N		
7143	Item type identification code	C	an..3	N		
1131	Code list identification code	C	an..17	N		
3055	Code list responsible agency code	C	an..3	N		

Remark:

Example:
PIA+1+HZ123456:SA'
PIA+1+HZ123456:SA++AQP:EF'

Global EDI Implementation Guideline DESADV D07

IMD Item description

Counter	No	Tag	St	Max Occ.	Level	Content
0390		**SG10**	R	9999	1	Despatch control line / group of inner packaging items and article line
0650		**SG17**	R	9999	2	Article and Despatched Article
0680	40	**IMD**	R	1	3	Item description

		Standard		Implementation		
Tag	Name	St	Format	St	Format	Remark
IMD						
7077	DESCRIPTION FORMAT CODE	C	an..3	R	an..3	Code specifying the format of a description. **F = Free-form** Description of an item in free form text.
C272	ITEM CHARACTERISTIC	C		R		
7081	Item characteristic code	C	an..3	R	an..3	Code specifying the characteristic of an item. **63 = Current article** The characteristic of an item or commodity in use.
1131	Code list identification code	C	an..17	N		
3055	Code list responsible agency code	C	an..3	N		
C273	ITEM DESCRIPTION	C		R		
7009	Item description code	C	an..17	N		
1131	Code list identification code	C	an..17	N		
3055	Code list responsible agency code	C	an..3	R	an..3	Code specifying the agency responsible for a code list. **92 = Assigned by buyer or buyer's agent** Codes assigned by a buyer or buyer's agent.
7008	Item description	C	an..256	C	an…40	Article description (Line 1) Description / short name of article in plain text.
7008	Item description	C	an..256	N		
3453	Language name code	C	an..3	R	an..3	Code specifying the language name. **DE = German** **EN = English** **ES = Spanish** **FR = French** **HU = Hungarian** **PL = Polish** **PT = Portuguese** **RO = Romanian** **RU = Russian** **SV = Swedish** **TR = Turkish** **ZH = Chinese** Use ISO 639-1.
7383	SURFACE OR LAYER CODE	C	an..3	N		

Remark:

Example:
IMD+F+63+::92:Gehäuse 4Kav DG KFP Mu 60kN::DE'

Counter = Counter of segment/group in the EDIFACT directory
No = Consecutive segment number
Tag = Segment-/Group-Tag
MaxOcc = Maximum occurrence of the segment/group

St = Status
EDIFACT: M=Mandatory, C=Conditional
Application: R=Required, O=Optional, D=Dependent
A=Advised, N=Not used

Global EDI Implementation Guideline DESADV D07

QTY Despatched quantity

Counter	No	Tag	St	Max Occ.	Level	Content
0390		**SG10**	R	9999	1	Despatch control line / group of inner packaging items and article line
0650		**SG17**	R	9999	2	Article and Despatched Article
0700	41	**QTY**	R	1	3	Despatched quantity

		Standard		Implementation		
Tag	Name	St	Format	St	Format	Remark
QTY						
C186	QUANTITY DETAILS	M	1	M	1	
6063	Quantity type code qualifier	M	an..3	M	an..3	Code qualifying the type of quantity. **12 =Despatch quantity** Quantity despatched by the seller.
6060	Quantity	M	an..35	M	n..10	Quantity despatched and shipped by the seller/ ship from. Decimals can be used
6411	Measurement unit code	C	an..8	R	an..3	Code specifying the unit of measurement. **PCE = Piece** **KGM = kilogram** **LTR = Litre** **MTR = Metre** **MTK = Square metre** **MTQ = Cubic metre** **SET = Set** Use UN/ECE Recommendation 20.

Remark:

Example:
QTY+12:1760:PCE'

QTY+12:1685.040:KGM'

Counter = Counter of segment/group in the EDIFACT directory
No = Consecutive segment number
Tag = Segment-/Group-Tag
MaxOcc = Maximum occurrence of the segment/group

St = Status
EDIFACT: M=Mandatory, C=Conditional
Application: R=Required, O=Optional, D=Dependent
A=Advised, N=Not used

Global EDI Implementation Guideline DESADV D07

RFF Delivery note reference, Line number

Counter	No	Tag	St	Max Occ.	Level	Content
0390		**SG10**	R	9999	1	Despatch control line / group of inner packaging items and article line
0650		**SG17**	R	9999	2	Article and Despatched Article
0830		**SG18**	R	1	3	Shipment / Delivery note reference
0840	42	**RFF**	M	1	3	Delivery note reference, Line number

		Standard		Implementation		
Tag	Name	St	Format	St	Format	Remark
RFF						
C506	REFERENCE	M		M		
1153	Reference code qualifier	M	an..3	M	an..3	Code qualifying a reference. **AAU = Despatch note document identifier** Reference number to identify a Despatch Note.
1154	Reference identifier	C	an..70	R	an..16	Identification assigned by supplier. The identifier must correspond with the Supplier Delivery Note ID. The ID must not be repeated within **five year**. This data element shall also be given on the Transport label.
1156	Document line identifier	C	an..6	R	an..6	Line number in the delivery note, right-aligned entry with preceding zeros, no decimal places. Admitted range 000001-999999.
1056	Version identifier	C	an..9	N		
1060	Revision identifier	C	an..6	N		

Remark:

This information also is transmitted in BGM segment but only with the value of DE 1154. Generate a new segment BGM for each delivery note number.

Example:

RFF+AAU:DN12345:000010'

Counter = Counter of segment/group in the EDIFACT directory
No = Consecutive segment number
Tag = Segment-/Group-Tag
MaxOcc = Maximum occurrence of the segment/group

St = Status
EDIFACT: M=Mandatory, C=Conditional
Application: R=Required, O=Optional, D=Dependent
A=Advised, N=Not used

Global EDI Implementation Guideline DESADV D07

DTM Delivery note date

Counter	No	Tag	St	Max Occ.	Level	Content
0390		**SG10**	R	9999	1	Despatch control line / group of inner packaging items and article line
0650		**SG17**	R	9999	2	Article and Despatched Article
0830		**SG18**	R	1	3	Shipment / Delivery note reference
0870	43	**DTM**	R	1	4	Delivery note date

		Standard		Implementation		
Tag	Name	St	Format	St	Format	Remark
DTM						
C507	DATE/TIME/PERIOD	M		M		
2005	Date or time or period function code qualifier	M	an..3	M	an..3	Code qualifying the function of a date, time or period. **171 = Reference date/time** Date/time on which the reference was issued.
2380	Date or time or period text	C	an..35	R	n..12	Delivery note date.
2379	Date or time or period format code	C	an..3	R	an..3	Code specifying the representation of a date, time or period. **102 = CCYYMMDD** Calendar date: C = Century ; Y = Year ; M = Month ; D = Day. **203 = CCYYMMDDHHMM** Calendar date including time with minutes: C=Century; Y=Year; M=Month; D=Day; H=Hour; M=Minutes.

Remark:

Example:
DTM+171:20141116:102'

Global EDI Implementation Guideline DESADV D07

RFF Order reference, Line number

Counter	No	Tag	St	Max Occ.	Level	Content
0390		**SG10**	R	9999	1	Despatch control line / group of inner packaging items and article line
0650		**SG17**	R	9999	2	Article and Despatched Article
0830		**SG18**	R	1	3	Order reference
0840	44	**RFF**	M	1	3	Order reference, Line number

		Standard		Implementation		
Tag	Name	St	Format	St	Format	Remark
RFF						
C506	REFERENCE	M		M		
1153	Reference code qualifier	M	an..3	M	an..3	Code qualifying a reference. **ON= Buyers order number** Identifier assigned by the buyer to an order.
1154	Reference identifier	C	an..70	R	an..35	Unique identifier of an order document.
1156	Document line identifier	C	an..6	O	an..6	Line number in the order.
1056	Version identifier	C	an..9	N		
1060	Revision identifier	C	an..6	N		

Remark:
Reference to a related Scheduling Agreement/Purchase order and line.

Example:
RFF+ON:5500024154:000010'

Counter = Counter of segment/group in the EDIFACT directory
No = Consecutive segment number
Tag = Segment-/Group-Tag
MaxOcc = Maximum occurrence of the segment/group

St = Status
EDIFACT: M=Mandatory, C=Conditional
Application: R=Required, O=Optional, D=Dependent
A=Advised, N=Not used

Global EDI Implementation Guideline DESADV D07

DGS Dangerous goods

Counter	No	Tag	St	Max Occ.	Level	Content
0390		**SG10**	R	9999	1	Despatch control line / group of inner packaging items and article line
0650		**SG17**	R	9999	2	Article and Despatched Article
0880		**SG19**	O	1	3	Dangerous goods information
0890	45	**DGS**	M	1	3	Dangerous goods

		Standard		Implementation		
Tag	Name	St	Format	St	Format	Remark
DGS						
8273	DANGEROUS GOODS REGULATIONS CODE	C	an..3	R	an..3	Code specifying a dangerous goods regulation. **ADR =European agreement on the international carriage of dangerous goods on road (ADR)** European agreement on the international carriage of dangerous goods on road. ADR is the abbreviation of "Accord europeen relatif au transport international des marchandises dangereuses par route". **GVS = DE, GGVS (Gefahrgutverordnung Strasse)** German regulation for the transportation of dangerous goods on road.
C205	HAZARD CODE	C		O		
8351	Hazard identification code	M	an..7	M	an..7	Code identifying a hazard Applicable codes have to be defined mutually.
8078	Additional hazard classification identifier	C	an..7	N		
8092	Hazard code version identifier	C	an..10	N		
C234	UNDG INFORMATION	C		R		
7124	United Nations Dangerous Goods (UNDG) identifier	C	n4	R	n4	Identification number assigned to the hazardous substance according to the UNDG regulations (United Nations Dangerous Goods).
7088	Dangerous goods flashpoint description	C	an..8	O	an..8	Flashpoint temperature.
C223	DANGEROUS GOODS SHIPMENT FLASHPOINT	C		N		
7106	Shipment flashpoint degree	C	n3	N		
6411	Measurement unit code	C	an..8	N		
8339	PACKAGING DANGER LEVEL CODE	C	an..3	N		
8364	EMERGENCY PROCEDURE FOR SHIPS IDENTIFIER	C	an..6	N		
8410	HAZARD MEDICAL FIRST AID GUIDE IDENTIFIER	C	an..4	N		
8126	TRANSPORT EMERGENCY CARD IDENTIFIER	C	an..10	N		
C235	HAZARD IDENTIFICATION PLACARD DETAILS	C		N		
8158	Orange hazard placard upper part identifier	C	an..4	N		
8186	Orange hazard placard lower part identifier	C	an4	N		
C236	DANGEROUS GOODS LABEL	C		N		
8246	Dangerous goods marking identifier	C	an..4	N		
8246	Dangerous goods marking identifier	C	an..4	N		

Counter = Counter of segment/group in the EDIFACT directory
No = Consecutive segment number
Tag = Segment-/Group-Tag
MaxOcc = Maximum occurrence of the segment/group

St = Status
EDIFACT: M=Mandatory, C=Conditional
Application: R=Required, O=Optional, D=Dependent
A=Advised, N=Not used

Global EDI Implementation Guideline DESADV D07

		Standard		Implementation		
Tag	Name	St	Format	St	Format	Remark
8246	Dangerous goods marking identifier	C	an..4	N		
8255	PACKING INSTRUCTION TYPE CODE	C	an..3	N		
8179	TRANSPORT MEANS DESCRIPTION CODE	C	an..8	N		
8211	HAZARDOUS CARGO TRANSPORT AUTHORISATION CODE	C	an..3	N		

Remark:
Dangerous goods details.

Example:
DGS+ADR+3+3101'

Global EDI Implementation Guideline DESADV D07

FTX Dangerous goods description

Counter	No	Tag	St	Max Occ.	Level	Content
0390		**SG10**	R	9999	1	Despatch control line / group of inner packaging items and article line
0650		**SG17**	R	9999	2	Article and Despatched Article
0880		**SG19**	O	1	3	Dangerous goods information
0910	46	**FTX**	O	1	4	Dangerous goods description

		Standard		Implementation		
Tag	Name	St	Format	St	Format	Remark
FTX						
4451	TEXT SUBJECT CODE QUALIFIER	M	an..3	M	an..3	Code qualifying the subject of the text. **AAD = Dangerous goods technical name** Proper shipping name, supplemented as necessarywith the correct technical name, by which a dangerous substance or article may be correctly identified, or which is sufficiently informative to permit identification by reference to generally available literature
4453	FREE TEXT FUNCTION CODE	C	an..3	N		
C107	TEXT REFERENCE	C		N		
4441	Free text description code	M	an..17	N		
1131	Code list identification code	C	an..17	N		
3055	Code list responsible agency code	C	an..3	N		
C108	TEXT LITERAL	C		R		
4440	Free text	M	an..512	M	an..512	A line of plain, non-structured text information.
4440	Free text	C	an..512	O	an..512	See 4440#1
4440	Free text	C	an..512	O	an..512	See 4440#1
4440	Free text	C	an..512	O	an..512	See 4440#1
4440	Free text	C	an..512	O	an..512	See 4440#1
3453	LANGUAGE NAME CODE	C	an..3	O	an..3	Code specifying the language name. **DE = German** **EN = English** **ES = Spanish** **FR = French** **HU = Hungarian** **PL = Polish** **PT = Portuguese** **RO = Romanian** **RU = Russian** **SV = Swedish** **TR = Turkish** **ZH = Chinese** Use ISO 639-1.
4447	FREE TEXT FORMAT CODE	C	an..3	N		

Remark:

Example:
FTX+AAD+++Text line1:line 2+EN'

Counter = Counter of segment/group in the EDIFACT directory
No = Consecutive segment number
Tag = Segment-/Group-Tag
MaxOcc = Maximum occurrence of the segment/group

St = Status
EDIFACT: M=Mandatory, C=Conditional
Application: R=Required, O=Optional, D=Dependent
A=Advised, N=Not used

Global EDI Implementation Guideline DESADV D07

FTX Dangerous goods declaration exception

Counter	No	Tag	St	Max Occ.	Level	Content
0390		**SG10**	R	9999	1	Despatch control line / group of inner packaging items and article line
0650		**SG17**	R	9999	2	Article and Despatched Article
0880		**SG19**	O	1	3	Dangerous goods information
0910	47	**FTX**	O	1	4	Dangerous goods declaration exception

		Standard		Implementation		
Tag	Name	St	Format	St	Format	Remark
FTX						
4451	TEXT SUBJECT CODE QUALIFIER	M	an..3	M	an..3	Code qualifying the subject of the text. **HAZ = Hazard information** Information pertaining to a hazard.
4453	FREE TEXT FUNCTION CODE	C	an..3	N		
C107	TEXT REFERENCE	C		N		
4441	Free text description code	M	an..17	N		
1131	Code list identification code	C	an..17	N		
3055	Code list responsible agency code	C	an..3	N		
C108	TEXT LITERAL	C		R		
4440	Free text	M	an..512	M	an..512	A line of plain, non-structured text information.
4440	Free text	C	an..512	O	an..512	See 4440#1
4440	Free text	C	an..512	O	an..512	See 4440#1
4440	Free text	C	an..512	O	an..512	See 4440#1
4440	Free text	C	an..512	O	an..512	See 4440#1
3453	LANGUAGE NAME CODE	C	an..3	R	an..3	Code specifying the language name. **DE = German** **EN = English** **ES = Spanish** **FR = French** **HU = Hungarian** **PL = Polish** **PT = Portuguese** **RO = Romanian** **RU = Russian** **SV = Swedish** **TR = Turkish** **ZH = Chinese** Use ISO 639-1.
4447	FREE TEXT FORMAT CODE	C	an..3	N		

Remark:

Example:
FTX+HAZ+++Text line1:line 2+EN'

Global EDI Implementation Guideline DESADV D07

LOC Place of discharge

Counter	No	Tag	St	Max Occ.	Level	Content
0390		**SG10**	R	9999	1	Despatch control line / group of inner packaging items and article line
0650		**SG17**	R	9999	2	Article and Despatched Article
0920		**SG20**	O	1	3	Place of discharge
0930	48	**LOC**	M	1	3	Place of discharge

		Standard		Implementation		
Tag	Name	St	Format	St	Format	Remark
LOC						
3227	LOCATION FUNCTION CODE QUALIFIER	M	an..3	M	an..3	Code identifying the function of a location. **11 = Place/port of discharge** Seaport, airport, freight terminal, rail station or other place at which the goods are unloaded from the means of transport having been used for their carriage.
C517	LOCATION IDENTIFICATION	C		R		
3225	Location name code	C	an..35	O	an..35	Identifier of location, site, etc.
1131	Code list identification code	C	an..17	N		
3055	Code list responsible agency code	C	an..3	R	an..3	Code specifying the agency responsible for a code list. **92 = Assigned by buyer or buyer's agent** Code specifying the agency responsible for a code list.
3224	Location name	C	an..256	O	an..256	Name of place of discharge, other than city name.
C519	RELATED LOCATION ONE IDENTIFICATION	C		N		
3223	First related location name code	C	an..35	N		
1131	Code list identification code	C	an..17	N		
3055	Code list responsible agency code	C	an..3	N		
3222	First related location name	C	an..70	N		
C553	RELATED LOCATION TWO IDENTIFICATION	C		N		
3233	Second related location name code	C	an..35	N		
1131	Code list identification code	C	an..17	N		
3055	Code list responsible agency code	C	an..3	N		
3232	Second related location name	C	an..70	N		
5479	RELATION CODE	C	an..3	N		

Remark:

Example:
LOC+11+GATE 15::92'

Counter = Counter of segment/group in the EDIFACT directory
No = Consecutive segment number
Tag = Segment-/Group-Tag
MaxOcc = Maximum occurrence of the segment/group

St = Status
EDIFACT: M=Mandatory, C=Conditional
Application: R=Required, O=Optional, D=Dependent
A=Advised, N=Not used

Global EDI Implementation Guideline DESADV D07

UNT Message trailer

Counter	No	Tag	St	Max Occ.	Level	Content
1160	49	**UNT**	M	1	0	Message trailer

		Standard		Implementation		
Tag	Name	St	Format	St	Format	Remark
UNT						
0074	NUMBER OF SEGMENTS IN A MESSAGE	M	n..6	M	n..6	The number of segments in a message body, plus the message header segment and message trailer segment
0062	MESSAGE REFERENCE NUMBER	M	an..14	M	an..14	Unique message reference assigned by the sender in transmission file. Repetition of the value transmitted in UNH DE 0062.

Remark :
Service segment ending a message.

Example :
UNT+47+1'

Global EDI Implementation Guideline DESADV D07

UNZ Interchange Trailer

Counter	No	Tag	St	Max Occ.	Level	Content
0000	50	**UNZ**	M	1	0	Interchange trailer

		Standard		Implementation		
Tag	Name	St	Format	St	Format	Remark
UNZ						
0036	INTERCHANGE CONTROL COUNT	M	n..6	M	n..6	Number of messages in an interchange.
0020	INTERCHANGE CONTROL REFERENCE	M	an..14	M	an..14	Reference number of transmission. Repetition of the value transmitted in UNB DE 0020.

Remark :

Example :
UNZ+1+MC08N6'

Counter = Counter of segment/group in the EDIFACT directory
No = Consecutive segment number
Tag = Segment-/Group-Tag
MaxOcc = Maximum occurrence of the segment/group

St = Status
EDIFACT: M=Mandatory, C=Conditional
Application: R=Required, O=Optional, D=Dependent
A=Advised, N=Not used

5.5. Message Pattern

No	Tag	St	MaxOcc	Content
1	**UNA**	R	1	UNA:+.? '
2	**UNB**	M	1	UNB+UNOC:3+SENDER+RECEIVER+141117:1803+MC08N6'
3	**UNH**	M	1	UNH+1+DESADV:D:07A:UN'
4	**BGM**	M	1	BGM+351+DN12345+9'
5	**DTM**	R	1	DTM+137:201411171009:203'
6	**DTM**	O	1	DTM+11:20141117:102'
7	**DTM**	O	1	DTM+132:201411180845:203'
	SG1	O	1	Transport document reference
8	**RFF**	M	1	RFF+AAS:263510'
	SG1	O	1	Invoice
9	**RFF**	M	1	RFF+IV:INV2014125'
10	**DTM**	O	1	DTM+171:20141117:102'
	SG1	O	1	Fiscal note
11	**RFF**	M	1	RFF+ARG:12345'
12	**DTM**	O	1	DTM+171:20141117:102'
	SG2	O	1	Buyer
13	**NAD**	M	1	NAD+BY+0014::92++Vibracoustic GmbH & Co KG+Höhnerweg, 2 - 4+Weinheim++69465+DE'
	SG2	R	1	Issuer/Plant
14	**NAD**	M	1	NAD+MI+1513::92++Vibracoustic GmbH & Co KG:Werk Hamburg +Hörstener Straße 47+Hamburg++21079+DE'
	SG2	R	1	Seller/Supplier
15	**NAD**	M	1	NAD+SE+100374::92++Beltan Vibracoustic Titresim+Sari Cadde No., 10+Bursa++16140+TR'
	SG3	R	1	Additional Party ID (DUNS)
16	**RFF**	M	1	RFF+ANK:012345678'
	SG2	R	1	Ship From
17	**NAD**	M	1	NAD+SF+100374::92++Beltan Vibracoustic Titresim+Sari Cadde No., 10+Bursa++16140+TR'
	SG3	D	1	Additional Party ID (DUNS)
18	**RFF**	M	1	RFF+ANK:012345679'
	SG2	R	1	Ship to
19	**NAD**	M	1	NAD+ST+1513::92++Vibracoustic GmbH & Co KG:Werk Hamburg +Hörstener Straße 47+Hamburg++21079+DE'
	SG10	O	9999	Despatch control line / List of handling unit groups

Counter = Counter of segment/group in the EDIFACT directory
No = Consecutive segment number
Tag = Segment-/Group-Tag
MaxOcc = Maximum occurrence of the segment/group

St = Status
EDIFACT: M=Mandatory, C=Conditional
Application: R=Required, O=Optional, D=Dependent
A=Advised, N=Not used

Global EDI Implementation Guideline DESADV D07

No	Tag	St	MaxOcc	Content
20	**CPS**	M	1	CPS+1++3'
	SG11	R	9999	Handling unit group details
21	**PAC**	M	1	PAC+1+:35:11+L1896::92'
22	**QTY**	O	1	QTY+171:2:C62'
23	**QTY**	R	1	QTY+189:8:C62'
	SG13	R	1000	List of individual handling units
24	**PCI**	M	1	PCI+17+++6J::5'
	SG15	R	1	Individual handling unit's transport label number
25	**GIN**	M	1	GIN+ML+210083724'
	SG15	R	98	Individual handling unit's label numbers
26	**GIN**	M	1	GIN+AW+110081010:110081015+110081017+110081019'
	SG11	O	9999	Packaging aid
27	**PAC**	M	1	PAC+1+:37:11+AUXL1896::92'
	SG10	R	9999	Despatch control line / group of inner packaging items and article line
28	**CPS**	M	1	CPS+2++1'
	SG11	R	9999	Group of inner packaging items
29	**PAC**	M	1	PAC+8+:35:11+KLT3422::92’
30	**QTY**	O	1	QTY+171:3:C62'
31	**QTY**	R	1	QTY+52:220:PCE'
	SG13	R	1000	List of individual package items
32	**PCI**	M	1	PCI+17+++1J::5'
	SG14	O	1	Production batch
33	**GIR**	M	1	GIR+1+560815:BX'
34	**DTM**	O	1	DTM+94:20141101:102'
35	**DTM**	R	1	DTM+36:20150201:102'
	SG15	R	99	Label number(s)
36	**GIN**	M	1	GIN+ML+110081010:110081015+110081017+110081019'
	SG11	O	9999	Packaging aid
37	**PAC**	M	1	PAC+16+:37:11+AUXKLT3422::92'
	SG17	R	9999	Article and Despatched Article
38	**LIN**	M	1	LIN+++R787000509C:IN'
39	**PIA**	O	1	PIA+1+HZ123456:SA++AQP:EF’

Counter = Counter of segment/group in the EDIFACT directory
No = Consecutive segment number
Tag = Segment-/Group-Tag
MaxOcc = Maximum occurrence of the segment/group

St = Status
EDIFACT: M=Mandatory, C=Conditional
Application: R=Required, O=Optional, D=Dependent
A=Advised, N=Not used

Global EDI Implementation Guideline DESADV D07

No	Tag	St	MaxOcc	Content
40	**IMD**	R	1	IMD+F+63+::92:Gehäuse 4Kav DG KFP Mu 60kN::DE'
41	**QTY**	R	1	QTY+12:1760:PCE'
	SG18	R	1	Shipment / Delivery note reference
42	**RFF**	M	1	RFF+AAU:DN12345:000010'
43	**DTM**	R	1	DTM+171:20141116:102'
	SG18	R	1	Order reference
44	**RFF**	M	1	RFF+ON:5500024154:000010'
	SG19	O	1	Dangerous goods information
45	**DGS**	M	1	DGS+ADR+3+3101'
46	**FTX**	O	1	FTX+AAD+++Text line1:line 2+EN'
47	**FTX**	O	1	FTX+HAZ+++Text line1:line 2+EN'
	SG20	O	1	Place of discharge
48	**LOC**	M	1	LOC+11+GATE 15::92'
49	**UNT**	M	1	UNT+47+1'
50	**UNZ**	M	1	UNZ+1+MC08N6'

Counter = Counter of segment/group in the EDIFACT directory
No = Consecutive segment number
Tag = Segment-/Group-Tag
MaxOcc = Maximum occurrence of the segment/group

St = Status
EDIFACT: M=Mandatory, C=Conditional
Application: R=Required, O=Optional, D=Dependent
A=Advised, N=Not used

5.6. Example message

UNA:+.? '	Service string advice
UNB+UNOC:3+SENDER+RECEIVER+141117:1803+MC08N6'	Interchange header
UNH+1+DESADV:D:07A:UN'	Message header
BGM+351+DN12345+9'	Beginning of message
DTM+137:201411171009:203'	Despatch advice date
DTM+11:20141117:102'	Despatch date
DTM+132:201411180845:203'	Estimated arrival date and time
RFF+AAS:263510'	Transport document reference
RFF+IV:INV2014125'	Invoice reference
DTM+171:20141117:102'	Reference date (invoice)
RFF+ARG:12345'	Fiscal note reference
DTM+171:20141117:102'	Reference date (fiscal note)
NAD+BY+0014::92++Vibracoustic GmbH & Co KG+Höhnerweg, 2 - 4+Weinheim++69465+DE'	Buyer's name and address
NAD+MI+1513::92++Vibracoustic GmbH & Co KG:Werk Hamburg +Hörstener Straße 47+Hamburg++21079+DE'	Issuer's name and address
NAD+SE+100374::92++Beltan Vibracoustic Titresim+Sari Cadde No., 10+Bursa++16140+TR'	Seller's name and address
RFF+ANK:012345678'	Seller's DUNS number
NAD+SF+100374::92++Beltan Vibracoustic Titresim+Sari Cadde No., 10+Bursa++16140+TR'	Ship From's name and address
RFF+ANK:012345679'	Ship From's DUNS number
NAD+ST+1513::92++Vibracoustic GmbH & Co KG:Werk Hamburg +Hörstener Straße 47+Hamburg++21079+DE'	Ship-to's name and address
CPS+1++3'	Consignment packing sequence
PAC+1+:35:11+L1896::92'	Package
QTY+171:2:C62'	Maximum stackability
QTY+189:8:C62'	Number of contained packages/items
PCI+17+++6J::5'	Handling unit label type
GIN+ML+210083724'	Individual handling unit's transport label number
GIN+AW+110081010:110081015+110081017+110081019'	Individual packaging item's label numbers
PAC+1+:37:11+AUXL1896::92'	Package
CPS+2++1'	Consignment packing sequence
PAC+8+:35:11+KLT3422::92'	Package
QTY+171:3:C62'	Maximum stackability
QTY+52:220:PCE'	Actual quantity per package
PCI+17+++1J::5'	Package identification
GIR+1+560815:BX'	Batch ID
DTM+94:20141101:102'	Production date
DTM+36:20150201:102'	Last use date
GIN+ML+110081010:110081015+110081017+110081019'	Label serial number(s)
PAC+16+:37:11+AUXKLT3422::92'	Package
LIN+++R787000509C:IN'	Line item
PIA+1+HZ123456:SA++AQP:EF'	Additional product id
IMD+F+63+::92:Gehäuse 4Kav DG KFP Mu 60kN::DE'	Item description
QTY+12:1760:PCE'	Despatched quantity
RFF+AAU:DN12345:000010'	Delivery note reference, Line number
DTM+171:20141116:102'	Delivery note date
RFF+ON:5500024154:000010'	Order reference, Line number
DGS+ADR+3+3101'	Dangerous goods
FTX+AAD+++Text line1:line 2+EN'	Dangerous goods description
FTX+HAZ+++Text line1:line 2+EN'	Dangerous goods declaration exception
LOC+11+GATE 15::92'	Place of discharge

Global EDI Implementation Guideline DESADV D07

UNT+47+1'	Message trailer
UNZ+1+MC08N6'	Interchange trailer

1.1 Examples with packaging

Example 1: Simplified Handling Units (1)

A despatch is sent containing 4 simplified handling units with serial numbers identified below with a preceding letters '1J'. The part numbers are the same in each handling unit with same package types and same quantities per pack used from one handling unit to the next.

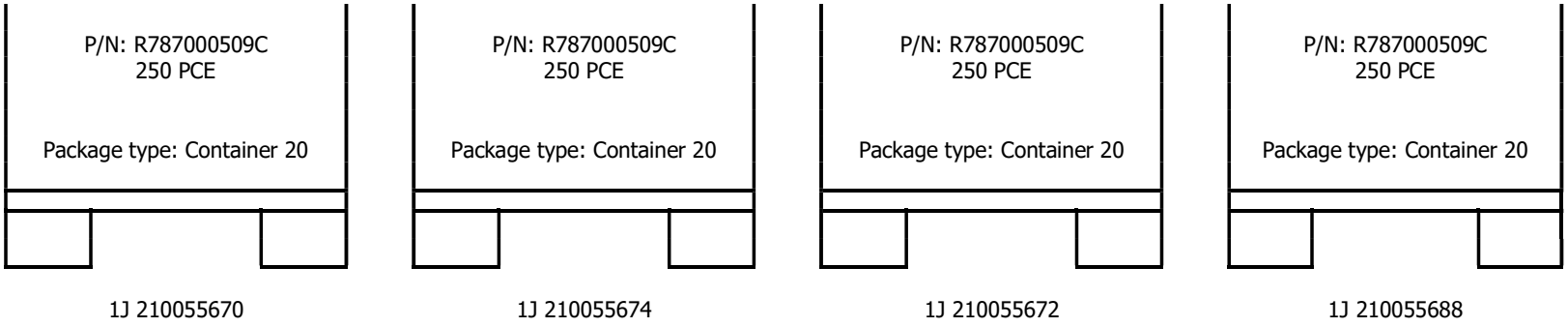

Global EDI Implementation Guideline DESADV D07A

Excerpts from the message detail regarding the packages and part numbers looks like the following:

↔	
CPS+1++4'	Code 4 indicates no hierarchy of package level exists (simplified Handling Unit).
PAC+4+:35:11+CONTAINER 20::92'	Four package of type **CONTAINER 20** exists.
QTY+52:250:PCE'	It contains 250 parts.
PCI+17+++1J::5'	The label identifier is for simplified handling unit (ISO code).
GIN+ML+210055670+210055674+210055672+210055688'	Simplified handling unit serial number.
LIN+++R787000509C:IN'	Buyer's Part number.
IMD+F+63+::92:Gehäuse 4Kav DG KFP Mu 60kN::DE'	Buyer's Part number description.
QTY+12:1000:PCE'	The quantity despatched is 1000 pieces (4x250).
↔	

Global EDI Implementation Guideline DESADV D07A

Example 2: Simplified Handling Units (2)

A despatch is sent containing 4 simplified handling units with serial numbers identified below with a preceding letters '1J'. The part numbers are the same in each handling unit with different package types and different quantities per pack used from one handling unit to the next.

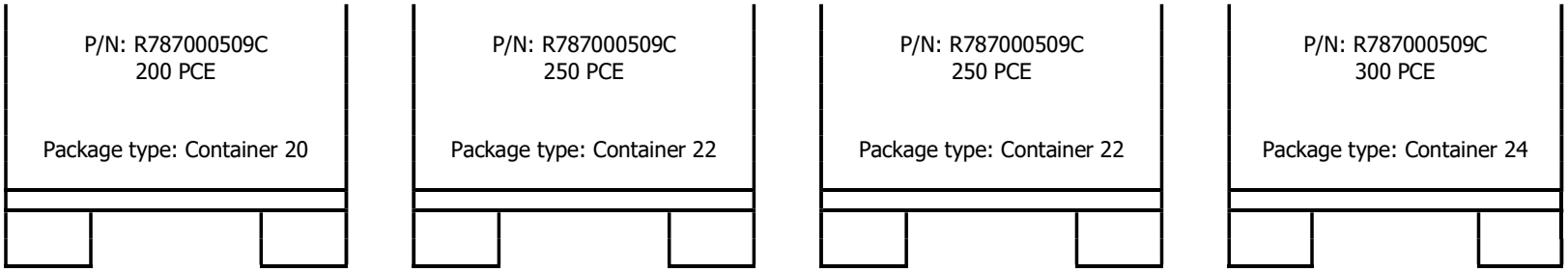

1J 210055670 | 1J 210055674 | 1J 210055672 | 1J 210055688

Global EDI Implementation Guideline DESADV D07A

Excerpts from the message detail regarding the packages and part numbers looks like the following:

↔	
CPS+1++4'	Code 4 indicates no hierarchy of package level exists (simplified Handling Unit).
PAC+1+:35:11+CONTAINER 20::92'	One package of type **CONTAINER 20** exists.
QTY+52:200:PCE'	It contains 200 parts.
PCI+17+++1J::5'	The label identifier is for simplified handling unit (ISO code).
GIN+ML+210055670'	Simplified handling unit serial number.
PAC+2+:35:11+CONTAINER 22::92'	Two packages of the same type **CONTAINER 22** exist.
QTY+52:250:PCE'	It contains 250 parts.
PCI+17+++1J::5'	The label identifier is for simplified handling unit (ISO code).
GIN+ML+210055674+210055672'	Simplified handling unit serial number.
PAC+1+:35:11+CONTAINER 24::92'	One package of the same type **CONTAINER 24** exist.
QTY+52:300:PCE'	It contains 300 parts.
PCI+17+++1J::5'	The label identifier is for simplified handling unit (ISO code).
GIN+ML+210055688'	Simplified handling unit serial number.
LIN+++R787000509C:IN'	Buyer's Part number.
IMD+F+63+::92:Gehäuse 4Kav DG KFP Mu 60kN::DE'	Buyer's Part number description.
QTY+12:1000:PCE'	The quantity despatched is 1000 pieces (200+2x250+300).
↔	

Global EDI Implementation Guideline DESADV D07A

Example 3: Simplified Handling Units (3)

A despatch is sent containing 4 simplified handling units with serial numbers identified below with a preceding letters '1J'. The part numbers vary from handling unit to handling unit and different package types are used from one handling unit to the next.

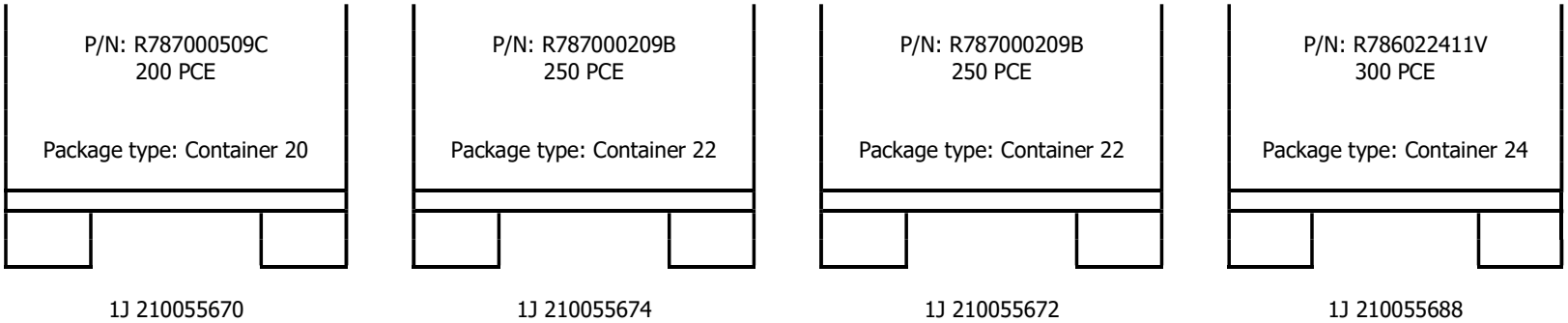

Global EDI Implementation Guideline DESADV D07A

Excerpts from the message detail regarding the packages and part numbers looks like the following:

↔	
CPS+1++4'	Code 4 indicates no hierarchy of package level exists (simplified Handling Unit).
PAC+1+:35:11+CONTAINER 20::92'	One package of type **Container 20** exists.
QTY+52:200:PCE'	It contains 200 parts.
PCI+17+++1J::5'	The label identifier is for simplified handling unit (ISO code).
GIN+ML+210055670'	Simplified handling unit serial number.
LIN+++R787000509C:IN'	Buyer's Part number.
IMD+F+63+::92:Gehäuse 4Kav DG KFP Mu 60kN::DE'	Buyer's Part number description.
QTY+12:200:PCE'	The quantity despatched is 200 pieces.
↔	
CPS+2++4'	Code 4 indicates no hierarchy of package level exists (simplified Handling Unit).
PAC+2+:35:11+CONTAINER 22::92'	Two packages of the same type **CONTAINER 22** exist.
QTY+52:250:PCE'	It contains 250 parts.
PCI+17+++1J::5'	The label identifier is for simplified handling unit (ISO code).
GIN+ML+210055674+210055672'	Simplified handling unit serial number.
LIN+++R787000209B:IN'	Buyer's Part number.
IMD+F+63+::92:Gehäuse 4Kav DG gedr.Mu 50kN::DE'	Buyer's Part number description.
QTY+12:500:PCE'	The quantity despatched is 500 pieces (2x250).
↔	
CPS+3++4'	Code 4 indicates no hierarchy of package level exists (simplified Handling Unit).
PAC+1+:35:11+CONTAINER 24::92'	One packages of the same type **CONTAINER 24** exist.
QTY+52:300:PCE'	It contains 300 parts.
PCI+17+++1J::5'	The label identifier is for simplified handling unit (ISO code).
GIN+ML+210055688'	Simplified handling unit serial number.
LIN+++ R786022411V:IN'	Buyer's Part number.
IMD+F+63+::92:FLANSCH vulkanisiert::DE'	Buyer's Part number description.
QTY+12:300:PCE'	The quantity despatched is 300 pieces.
↔	

Global EDI Implementation Guideline DESADV D07A

Example 4: Simplified Handling Units (4)

A despatch is sent containing 4 simplified handling units with serial numbers identified below with a preceding letters '1J'. The part numbers are the same in each handling unit with same package types and same quantities per pack used from one handling unit to the next. The production batch vary from handling unit to handling unit.

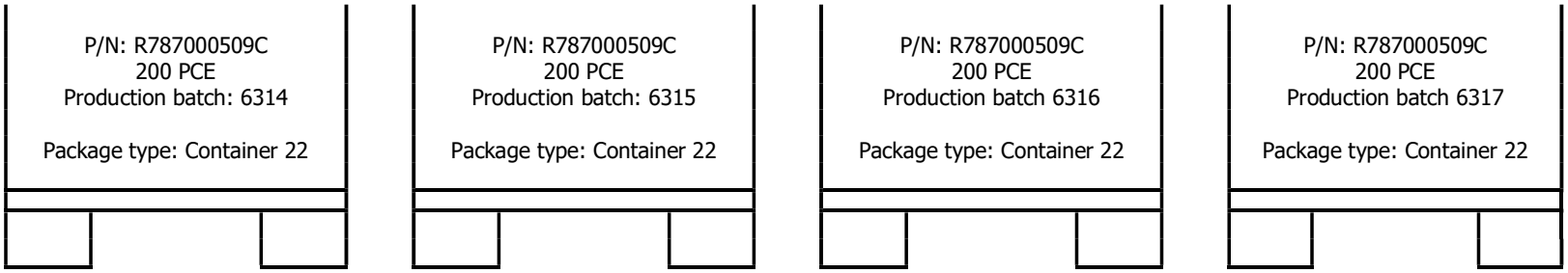

1J 210055670 1J 210055674 1J 210055672 1J 210055688

Global EDI Implementation Guideline DESADV D07A

Excerpts from the message detail regarding the packages and part numbers looks like the following:
(A separate delivery note item must be generated for each production batch, production date and last use date)

↔	
CPS+1++4'	Code 4 indicates no hierarchy of package level exists (simplified Handling Unit).
PAC+4+:35:11+CONTAINER 22::92'	Four package of type Container 22 exists.
QTY+52:200:PCE'	It contains 200 parts.
PCI+17+++1J::5'	The label identifier is for simplified handling unit (ISO code).
GIN+ML+210055670'	Simplified handling unit serial number.
GIR+1+6314:BX'	**Batch ID for this HU.**
DTM+94:20141101:102'	**Production date.**
DTM+36:20150201:102'	**Last use date.**
LIN+++R787000509C:IN'	Buyer's Part number.
IMD+F+63+::92:Gehäuse 4Kav DG KFP Mu 60kN::DE'	Buyer's Part number description.
QTY+12:200:PCE'	The quantity despatched is 800 pieces (4x200).
RFF+AAU:DN12345:000010'	Delivery note number, item 1
↔	
CPS+2++4'	New consignment package because of the batch
PCI+17+++1J::5'	The label identifier is for simplified handling unit (ISO code).
GIN+ML+210055674'	Simplified handling unit serial number.
GIR+1+6315:BX'	**Batch ID for this HU.**
DTM+94:20141101:102'	**Production date.**
DTM+36:20150201:102'	**Last use date.**
LIN+++R787000509C:IN'	Buyer's Part number.
IMD+F+63+::92:Gehäuse 4Kav DG KFP Mu 60kN::DE'	Buyer's Part number description.
QTY+12:200:PCE'	The quantity despatched is 800 pieces (4x200).
RFF+AAU:DN12345:000020'	Delivery note number, item 2
↔	
CPS+3++4'	New consignment package because of the batch
PCI+17+++1J::5'	The label identifier is for simplified handling unit (ISO code).
GIN+ML+210055672'	Simplified handling unit serial number.
GIR+1+6316:BX'	**Batch ID for this HU.**
DTM+94:20141102:102'	**Production date.**

Global EDI Implementation Guideline DESADV D07A

DTM+36:20150201:102'	**Last use date.**
LIN+++R787000509C:IN'	Buyer's Part number.
IMD+F+63+::92:Gehäuse 4Kav DG KFP Mu 60kN::DE'	Buyer's Part number description.
QTY+12:200:PCE'	The quantity despatched for this batch is 200 pieces.
RFF+AAU:DN12345:000030'	Delivery note number, item 3
↔	
CPS+4++4'	New consignment package because of the batch
PCI+17+++1J::5'	The label identifier is for simplified handling unit (ISO code).
GIN+ML+210055688'	Simplified handling unit serial number.
GIR+1+6317:BX'	**Batch ID for this HU.**
DTM+94:20141102:102'	**Production date.**
DTM+36:20150201:102'	**Last use date.**
LIN+++R787000509C:IN'	Buyer's Part number.
IMD+F+63+::92:Gehäuse 4Kav DG KFP Mu 60kN::DE'	Buyer's Part number description.
QTY+12:200:PCE'	The quantity despatched for this batch is 200 pieces.
RFF+AAU:DN12345:000040'	Delivery note number, item 4
↔	

Global EDI Implementation Guideline DESADV D07A

Example 5: Simplified Handling Units (5)

A despatch is sent containing 4 simplified handling units with serial numbers identified below with a preceding letters '1J'. The part numbers are the same in each handling unit with same package types and different quantities: two Handling Units with the same production batch and two Handling Units with different production batch. We should have 3 positions in the delivery note to differentiate the batch ID.

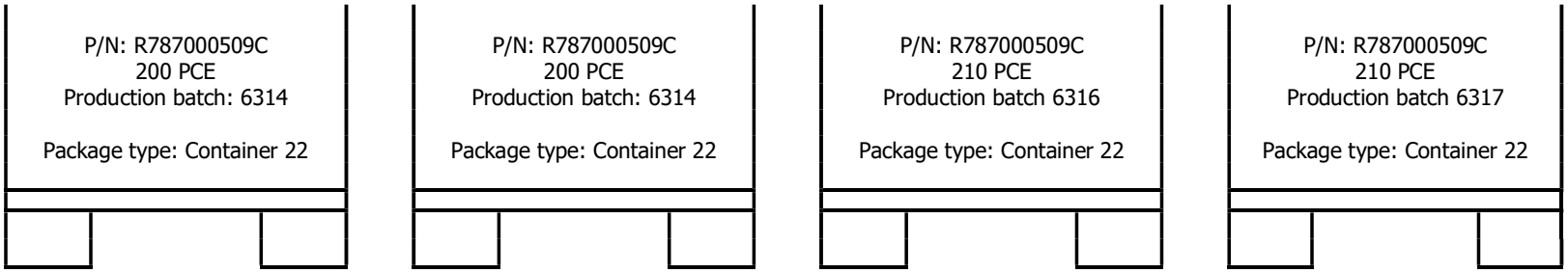

1J 210055670 1J 210055674 1J 210055672 1J 210055688

Global EDI Implementation Guideline DESADV D07A

Excerpts from the message detail regarding the packages and part numbers looks like the following:
(A separate delivery note item must be generated for each production batch, production date and last use date)

↔	
CPS+1++4'	Code 4 indicates no hierarchy of package level exists (simplified Handling Unit).
PAC+2+:35:11+CONTAINER 22::92'	Two package of type Container 22 exists.
QTY+52:200:PCE'	It contains 200 parts.
PCI+17+++1J::5'	The label identifier is for simplified handling unit (ISO code).
GIN+ML+210055670+210055674'	Simplified handling unit serial number.
GIR+1+6314:BX'	**Batch ID for this HU.**
DTM+94:20141101:102'	**Production date.**
DTM+36:20150201:102'	**Last use date.**
LIN+++R787000509C:IN'	Buyer's Part number.
IMD+F+63+::92:Gehäuse 4Kav DG KFP Mu 60kN::DE'	Buyer's Part number description.
QTY+12:400:PCE'	The quantity despatched for this batch is 400 pieces (2x200).
RFF+AAU:DN12345:000010'	Item position 1 of the material in the supplier delivery note
↔	
CPS+2++4'	New consignment package because of the batch
PAC+1+:35:11+CONTAINER 22::92'	1 package of type Container 22 exists.
QTY+52:210:PCE'	It contains 210 parts.
PCI+17+++1J::5'	The label identifier is for simplified handling unit (ISO code).
GIN+ML+210055672'	Simplified handling unit serial number.
GIR+1+6316:BX'	**Batch ID for this HU.**
DTM+94:20141102:102'	**Production date.**
DTM+36:20150201:102'	**Last use date.**
LIN+++R787000509C:IN'	Buyer's Part number.
IMD+F+63+::92:Gehäuse 4Kav DG KFP Mu 60kN::DE'	Buyer's Part number description.
QTY+12:210:PCE'	The quantity despatched is 210 pieces (1x210).
RFF+AAU:DN12345:000020'	Item position 2 of the material in the supplier delivery note
↔	
CPS+3++4'	New consignment package because of the batch
PAC+1+:35:11+CONTAINER 22::92'	1 package of type Container 22 exists.
QTY+52:210:PCE'	It contains 210 parts.

Global EDI Implementation Guideline DESADV D07A

PCI+17+++1J::5'	The label identifier is for simplified handling unit (ISO code).
GIN+ML+210055688'	Simplified handling unit serial number.
GIR+1+6317:BX'	**Batch ID for this HU.**
DTM+94:20141102:102'	**Production date.**
DTM+36:20150201:102'	**Last use date.**
LIN+++R787000509C:IN'	Buyer's Part number.
IMD+F+63+::92:Gehäuse 4Kav DG KFP Mu 60kN::DE'	Buyer's Part number description.
QTY+12:210:PCE'	The quantity despatched is 210 pieces (1x210).
RFF+AAU:DN12345:000030'	Item position 1 of the material in the supplier delivery note
↔	

Global EDI Implementation Guideline DESADV D07A

Example 6: Handling Units (1)

A despatch is sent containing 2 homogeneous handling units of type L1896 with serial numbers identified below that are shown with a preceding letters 'J6'. The part numbers are the same (R787000509C) in each package (identified with serial number that is shown with a preceding letter '1J') and they contain the same quantity (110 PCE). The package type (KLT3422) is the same for both handling units.

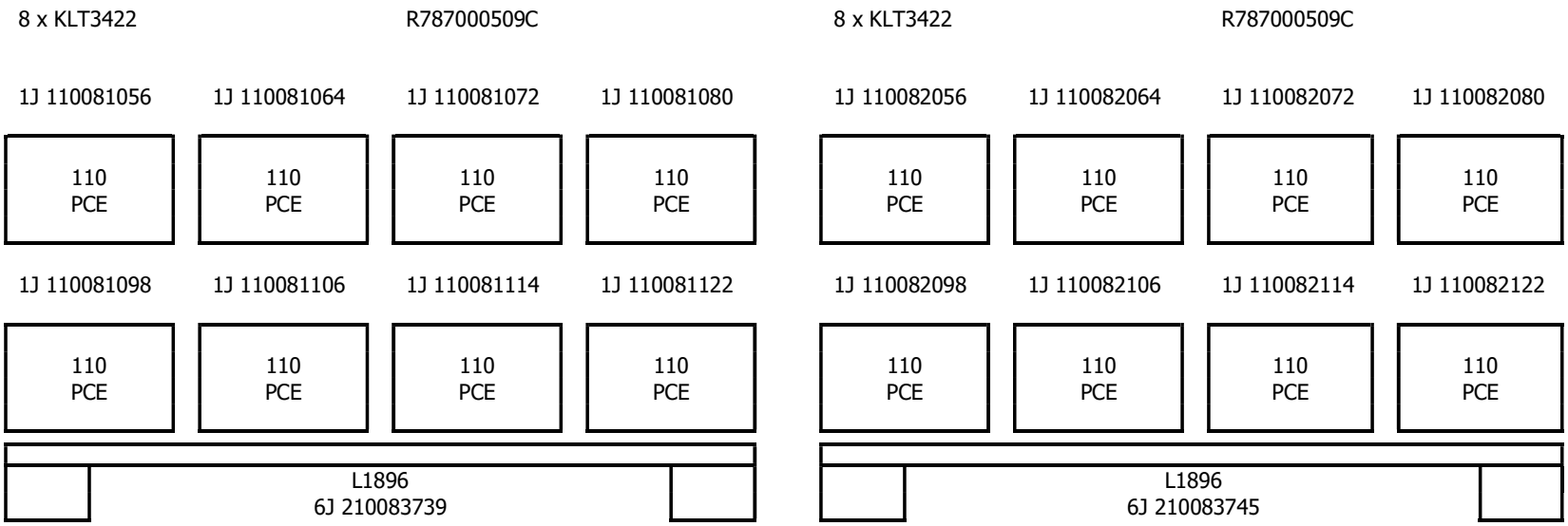

Global EDI Implementation Guideline DESADV D07A

Excerpts from the message detail regarding the packages and part numbers looks like the following:

↔	
	Group of handling units:
CPS+1++3'	Code 3 indicates outer package level.
PAC+2+:35:11+L1896::92'	Two handling unit of type L1896.
QTY+189:8:C62'	Eight inner packages in each handling units.
	Individual handling unit:
PCI+17+++6J:5'	The label identifier is for the first handling unit (Master Label).
GIN+ML+210083739'	First handling unit serial number.
GIN+AW+110081056+110081064+110081072+110081080+110081098'	Inner serial numbers related to the first handling unit.
GIN+AW+110081106+110081114+110081122'	Continuation…
	Individual handling unit:
PCI+17+++6J:5'	The label identifier is for the second handling unit (Master Label).
GIN+ML+210083745’	Second handling unit serial number.
GIN+AW+110082056+110082064+110082072+110082080+110082098	Inner serial numbers related to the second handling unit.
GIN+AW+110082106+110082114+110082122’	Continuation…
	Inner package and article line(s):
CPS+2++1'	Code 1 indicates inner package level.
PAC+16++ KLT3422::92'	Sixteen packages of type KLT3422 exist.
QTY+52:110:PCE'	Each package contains 110 parts.
PCI+17+++1J:5'	The label identifier is for the inner packaging (Single Label).
GIN+ML+110081056+110081064+110081072+110081080+110081098'	Inner package serial numbers.
GIN+ML+110081106+110081114+110081122+110082056+110082064'	Continuation of inner package serial numbers.
GIN+ML+110082072+110082080+110082098+110082106+110082114'	Continuation of inner package serial numbers.
GIN+ML+110082122'	Continuation of inner package serial numbers.
	Article line:
LIN+++R787000509C:IN'	Buyer’s Part number.
IMD+F+63+::92:Gehäuse 4Kav DG KFP Mu 60kN::DE'	Part number description.
QTY+12:1760:PCE'	The quantity despatched is 1760 pieces.
↔	

Global EDI Implementation Guideline DESADV D07A

Example 7: Handling Units (2)

A despatch is sent containing 2 homogeneous handling units of type L1896 with serial numbers identified below that are shown with a preceding letters 'J6'. The part numbers are the same (R787000509C) in each package (identified with serial number that is shown with a preceding letter '1J') and they contain different quantities (110, 90, 100, 80 PCE). The package type (KLT3422) is the same for both handling units.

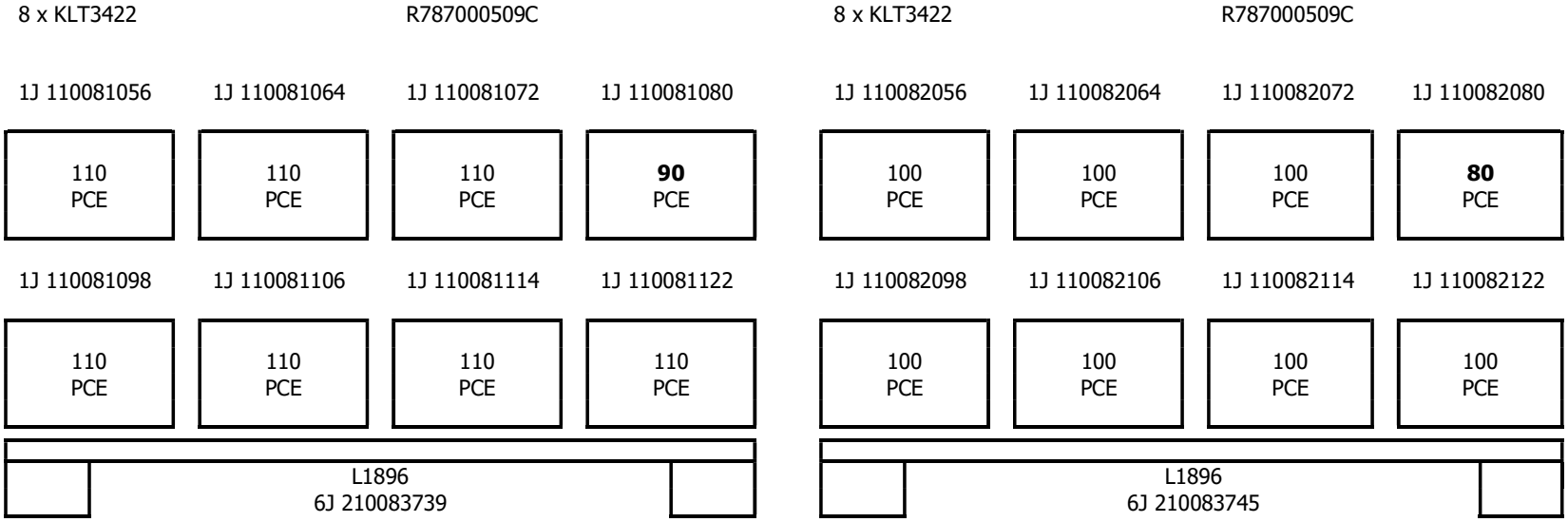

Global EDI Implementation Guideline DESADV D07A

Excerpts from the message detail regarding the packages and part numbers looks like the following:

↔	
	Group of handling units:
CPS+1++3'	Code 3 indicates outer package level.
PAC+2+:35:11+L1896::92'	Two handling unit of type L1896.
QTY+189:8:C62'	Eight inner packages in each handling units.
	Individual handling unit:
PCI+17+++6J:5'	The label identifier is for the first handling unit (Master Label).
GIN+ML+210083739'	First handling unit serial number.
GIN+AW+110081056+110081064+110081072+110081080+110081098'	Inner serial numbers related to the first handling unit.
GIN+AW+110081106+110081114+110081122'	Continuation…
	Individual handling unit:
PCI+17+++6J:5'	The label identifier is for the second handling unit (Master Label)..
GIN+ML+210083745'	Second handling unit serial number.
GIN+AW+110082056+110082064+110082072+110082080+110082098'	Inner serial numbers related to the second handling unit.
GIN+AW+110082106+110082114+110082122'	Continuation…
	Inner package and article line(s):
CPS+2++1'	Code 1 indicates inner package level.
PAC+7++KLT3422::92'	Seven packages of type KLT3422 exist.
QTY+52:110:PCE'	Each package contains 110 parts.
PCI+17+++1J:5'	The label identifier is for the inner packaging (Single Label).
GIN+ML+110081056+110081064+110081072+110081098+110081106'	Inner package serial numbers.
GIN+ML+110081114+110081122'	Continuation of inner package serial numbers.
PAC+7++KLT3422::92'	Seven packages of type KLT3422 exist.
QTY+52:100:PCE'	Each package contains 100 parts.
PCI+17+++1J:5'	The label identifier is for the inner packaging (Single Label).
GIN+ML+110082056+110082064+110082072+110082098+110082106'	Inner package serial numbers.
GIN+ML+110082114+110082122'	Continuation of inner package serial numbers.
PAC+1++KLT3422::92'	One packages of type KLT3422 exist.
QTY+52:90:PCE'	Each package contains 90 parts.
PCI+17+++1J:5'	The label identifier is for the inner packaging (Single Label).
GIN+ML+110081080'	Inner package serial numbers.
PAC+1++KLT3422::92'	One packages of type KLT3422 exist.
QTY+52:80:PCE'	Each package contains 80 parts.
PCI+17+++1J:5'	The label identifier is for the inner packaging (Single Label).
GIN+ML+110082080'	Inner package serial numbers.

Global EDI Implementation Guideline DESADV D07A

LIN+++R787000509C:IN'	Buyer's Part number.
IMD+F+63+::92:Gehäuse 4Kav DG KFP Mu 60kN::DE'	Buyer's Part number description.
QTY+12:1640:PCE'	The quantity despatched is 1640 pieces.
↔	

Global EDI Implementation Guideline DESADV D07A

Example 8: Handling Units (3)

A despatch is sent containing 2 homogeneous handling units of type L1896 with serial numbers identified below that are shown with a preceding letters 'J6'. The part numbers are the same (R787000509C) in each package (identified with serial number that is shown with a preceding letter '1J') and they contain the same quantity (110 PCE) with some empty KLT3422 without label identification. The package type (KLT3422) is the same for both handling units.

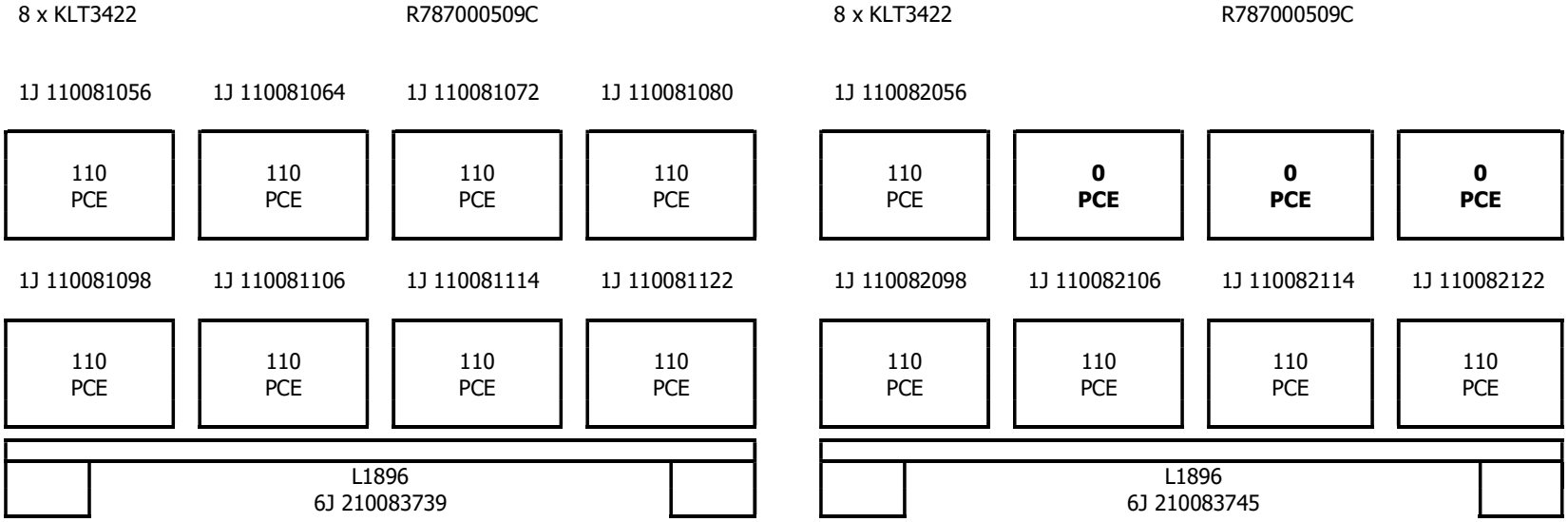

Global EDI Implementation Guideline DESADV D07A

Excerpts from the message detail regarding the packages and part numbers looks like the following:

↔	
	Group of handling units:
CPS+1++3'	Code 3 indicates outer package level.
PAC+1+:35:11+L1896::92'	One handling unit of type L1896
QTY+189:8:C62'	Eight inner packages in each handling units.
PCI+17+++6J:5'	The label identifier is for the first handling unit (Master Label).
GIN+ML+210083739'	First handling unit serial number.
GIN+AW+110081056+110081064+110081072+110081080+110081098'	Inner serial numbers related to the first handling unit.
GIN+AW+110081106+110081114+110081122'	Continuation…
CPS+2++3'	Code 3 indicates outer package level.
PAC+1+:35:11+L1896::92'	One handling unit of type L1896.
QTY+189:5:C62'	Five inner packages in each handling units.
PCI+17+++6J:5'	The label identifier is for the second handling unit (Master Label).
GIN+ML+210083745'	Second handling unit serial number.
GIN+AW+110082056+110082098+110082106+110082114+110082122'	Inner serial numbers related to the second handling unit (ONLY FIVE LABELS).
PAC+3+:37:11+ KLT3422::92'	**Three empty inners packaging (Three KLT3422 empty).**
	Inner package and article line(s):
CPS+3++1'	Code 1 indicates inner package level.
PAC+13++KLT3422::92'	Thirteen packages of type KLT3422 exist.
QTY+52:110:PCE'	Each package contains 110 parts.
PCI+17+++1J:5'	The label identifier is for the inner packaging (Single Label).
GIN+ML+110081056+110081064+110081072+110081080+110081098'	Inner package serial numbers.
GIN+ML+110081106+110081114+110081122+110082056+110082098'	Continuation of inner package serial numbers.
GIN+ML+110082106+110082114+110082122'	Continuation of inner package serial numbers.
	Article line:
LIN+++R787000509C:IN'	Buyer's Part number.
IMD+F+63+::92:Gehäuse 4Kav DG KFP Mu 60kN::DE'	Buyer's Part number description.
QTY+12:1430:PCE'	The quantity despatched is 1640 pieces.
↔	

Global EDI Implementation Guideline DESADV D07A

Example 9: Handling Units (4)

A despatch is sent containing 2 homogeneous handling units of type L1896 with serial numbers identified below that are shown with a preceding letters 'J6'. The part numbers are the same (R787000509C) in each package (identified with serial number that is shown with a preceding letter '1J') and they contain the same quantity (110 PC). The package type (KLT22) is the same for both handling units. Every KLT22 has a cover named AUXKLT22 and in the top of each Handling Unit has a cover named AUXL1896.

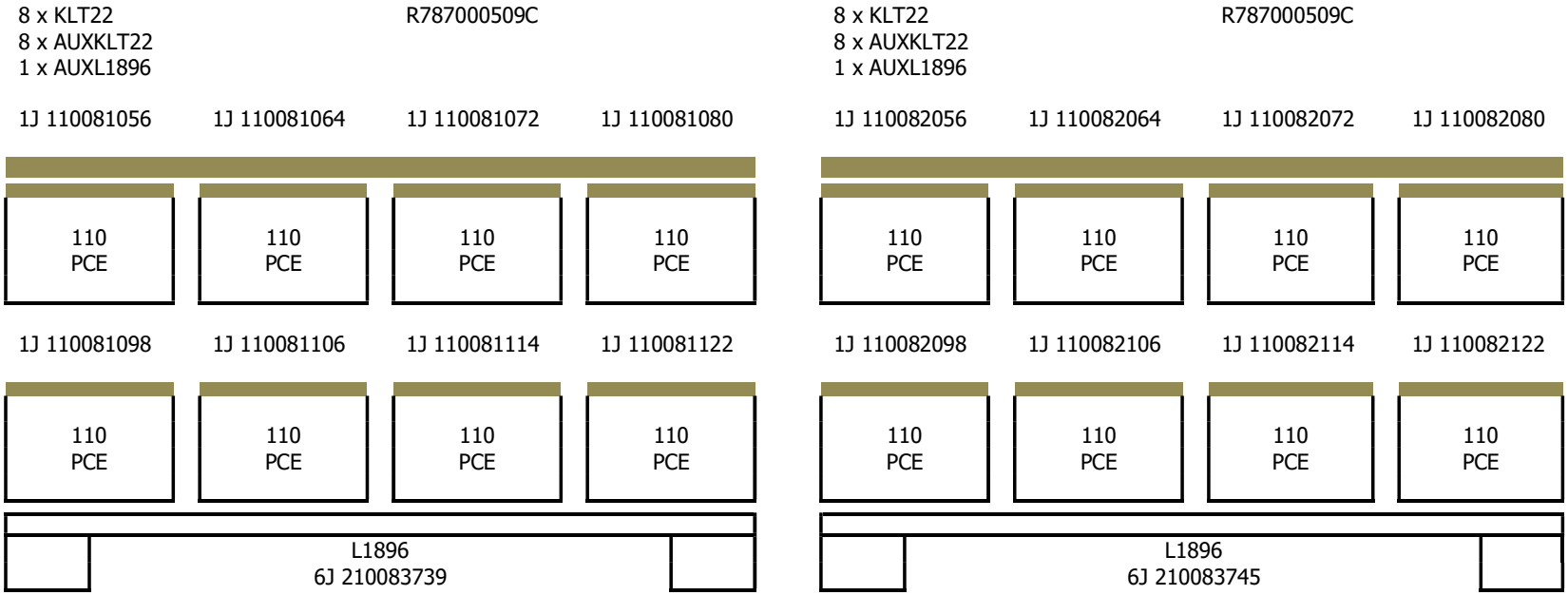

Global EDI Implementation Guideline DESADV D07A

Excerpts from the message detail regarding the packages and part numbers looks like the following:

↔	
	Group of handling units:
CPS+1++3'	Code 3 indicates outer package level.
PAC+2+:35:11+L1896::92'	Two handling unit of type L1896.
QTY+189:8:C62'	Eight inner packages in each handling units.
	Individual handling unit:
PCI+17+++6J:5'	The label identifier is for the first handling unit (Master Label).
GIN+ML+210083739'	First handling unit serial number.
GIN+AW+110081056+110081064+110081072+110081080+110081098'	Inner serial numbers related to the first handling unit.
GIN+AW+110081106+110081114+110081122'	Continuation…
	Individual handling unit:
PCI+17+++6J:5'	The label identifier is for the second handling unit (Master Label).
GIN+ML+210083745'	Second handling unit serial number.
GIN+AW+110082056+110082064+110082072+110082080+110082098'	Inner serial numbers related to the second handling unit.
GIN+AW+110082106+110082114+110082122'	Continuation…
PAC+2+:37:11+AUXL1896::92'	Two auxiliar outer packaging (Cover of each handling unit).
	Inner package and article line(s):
CPS+2++1'	Code 1 indicates inner package level.
PAC+16++ KLT22::92'	Sixteen packages of type x KLT3422 exist.
QTY+52:110:PCE'	Each package contains 110 parts.
PCI+17+++1J:5'	The label identifier is for the inner packaging (Single Label).
GIN+ML+110081056+110081064+110081072+110081080+110081098'	Inner package serial numbers.
GIN+ML+110081106+110081114+110081122+110082056+110082064'	Continuation of inner package serial numbers.
GIN+ML+110082072+110082080+110082098+110082106+110082114'	Continuation of inner package serial numbers.
GIN+ML+110082122'	Continuation of inner package serial numbers.
PAC+16+:37:11+AUXKLT22::92'	Sixteen auxiliar inner packaging (Cover of each KLT22).
	Article line:
LIN+++R787000509C:IN'	Buyer's Part number.
IMD+F+63+::92:Gehäuse 4Kav DG KFP Mu 60kN::DE'	Buyer's Part number description.
TY+12:1760:PCE'	The quantity despatched is 1710 pieces.
↔	

Global EDI Implementation Guideline DESADV D07A

Example 10: Handling Units (5)

A despatch is sent containing 2 homogeneous handling units of type L1896 with serial numbers identified below that are shown with a preceding letters 'J6'. The part numbers are the same (R787000509C) in each package (identified with serial number that is shown with a preceding letter '1J') and they contain the same quantity (110 PC). The package type (KLT22) is the same for both handling units. Every KLT22 has two auxiliar packaging: an internal named AINKLT22 and a covers named AUXKLT22. Each Handling Unit has a cover name AUXL1896.

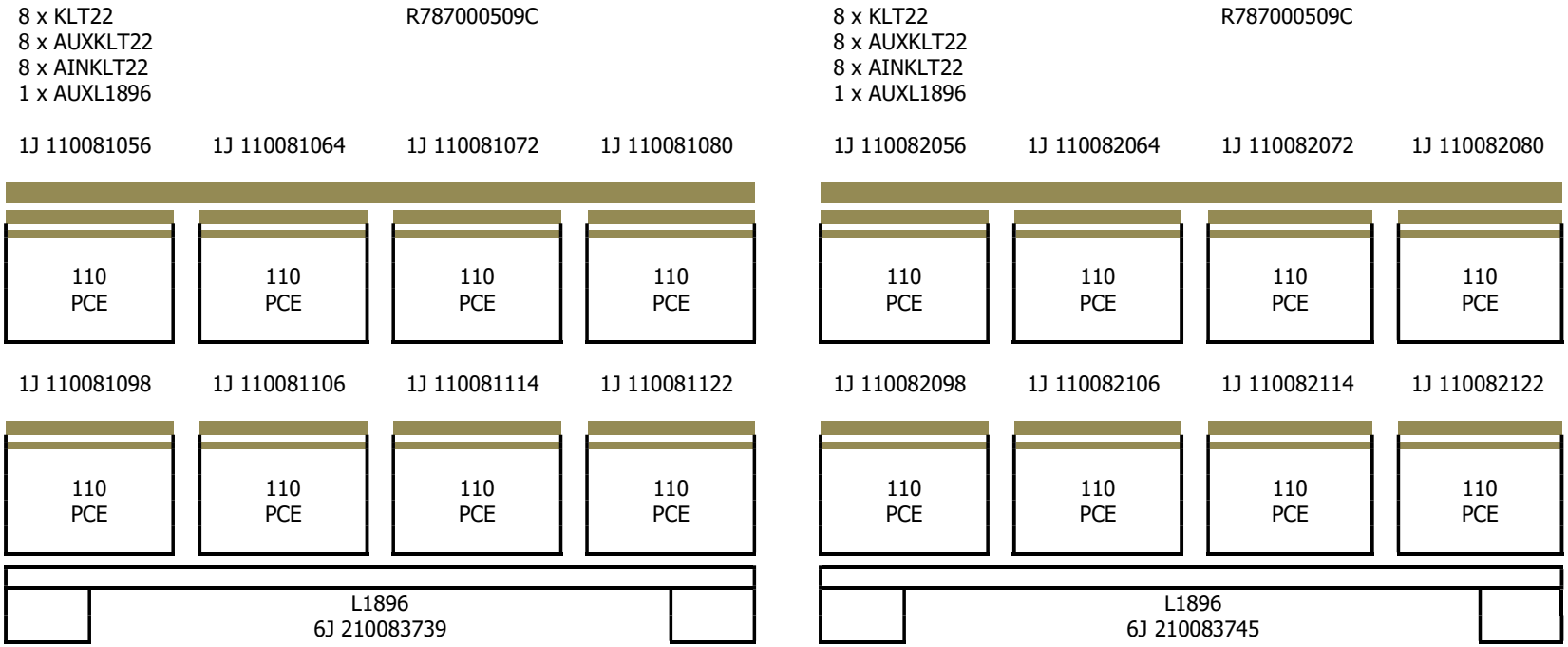

Global EDI Implementation Guideline DESADV D07A

Excerpts from the message detail regarding the packages and part numbers looks like the following:

↔	
	Group of handling units:
CPS+1++3'	Code 3 indicates outer package level.
PAC+2+:35:11+L1896::92'	Two handling unit of type L1896.
QTY+189:8:C62'	Eight inner packages in each handling units.
	Individual handling unit:
PCI+17+++6J:5'	The label identifier is for the first handling unit (Master Label).
GIN+ML+210083739'	First handling unit serial number.
GIN+AW+110081056+110081064+110081072+110081080+110081098'	Inner serial numbers related to the first handling unit.
GIN+AW+110081106+110081114+110081122'	Continuation…
	Individual handling unit:
PCI+17+++6J:5'	The label identifier is for the second handling unit (Master Label).
GIN+ML+210083745'	Second handling unit serial number.
GIN+AW+110082056+110082064+110082072+110082080+110082098'	Inner serial numbers related to the second handling unit.
GIN+AW+110082106+110082114+110082122'	Continuation…
PAC+2+:37:11+AUXL1896::92'	**Two auxiliar outer packaging (Cover of each handling unit).**
	Inner package and article line(s):
CPS+2++1'	Code 1 indicates inner package level.
PAC+16++ KLT22::92'	Sixteen packages of type x KLT3422 exist.
QTY+52:110:PCE'	Each package contains 110 parts.
PCI+17+++1J:5'	The label identifier is for the inner packaging (Single Label).
GIN+ML+110081056+110081064+110081072+110081080+110081098'	Inner package serial numbers.
GIN+ML+110081106+110081114+110081122+110082056+110082064'	Continuation of inner package serial numbers.
GIN+ML+110082072+110082080+110082098+110082106+110082114'	Continuation of inner package serial numbers.
GIN+ML+110082122'	Continuation of inner package serial numbers.
PAC+16+:37:11+AINKLT22::92'	**Sixteen auxiliar inner packaging (Internal protection of each KLT22).**
PAC+16+:37:11+AUXKLT22::92'	**Sixteen auxiliar inner packaging (Cover of each KLT22).**
	Article line:
LIN+++R787000509C:IN'	Buyer's Part number.
IMD+F+63+::92:Gehäuse 4Kav DG KFP Mu 60kN::DE'	Buyer's Part number description.
QTY+12:1760:PCE'	The quantity despatched is 1710 pieces.
↔	

6. RESPONSIBILITIES

List the actions and who has the responsibility, include level of responsibility. Include a presentation of responsibility within a flow chart.

Task / Function	Vibracoustic	Supplier		
Implement Message	R,A	R		
Implementation by supplier	C	R,A		
Update delivery Process	R,A	I		
Transfer supplier to new message	R,A	R		
Maintenance guidelines and EDI messages	R,A	R		

Responsible: Process owner, responsible to carry out the business process (implementation, execution)

Accountable: Approver, responsible for the result of the business process (objectives, design, monitoring)

Consulted: Experts; two-way communication

Informed: Persons that need to be kept up-to-date; one-way communication

7. APPENDIX / ENCLOSURES

Additional information, notes, examples and the forms which have to be used could be listed in the appendix.

No.	Type of Document	Title / Description	Enclosure

8. VALID SUPPORTING / REFERENCE DOCUMENTS

General Framework.

GP_01_7.4_0009_Logistics Requirements for suppliers.

For any question, please contact supplier.edi@vibracoustic.com.

9. DOCUMENTATION

Vibracoustic will keep this procedure on file.

In case of a revision the latest edition will be kept for at least 3 years after revision.